2 DOOR CABINET WITH DRAWER

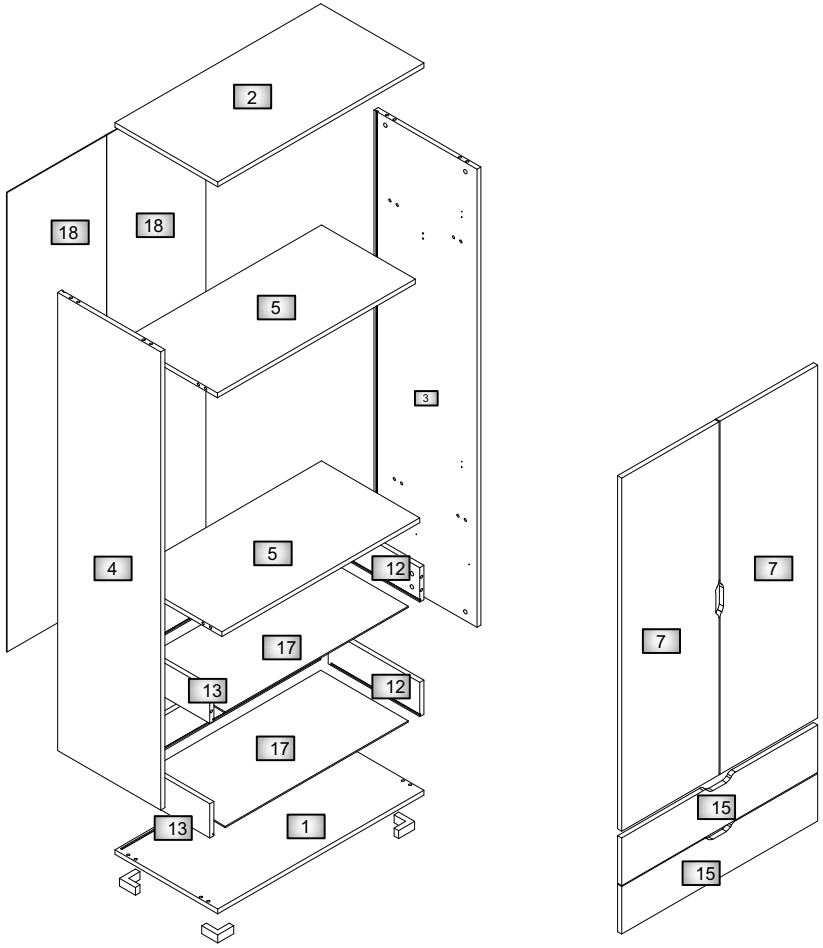

Dear Customer,
Before this product you have purchased reaches you, all of our has been tested and checked and packaged.
However, some parts may be damaged during transportation.
If you encounter such a situation, do not send the entire product back. and simply ask for the damaged part and the material.

You can find the code of the required parts and materials in the installation manual.
Before starting the assembly, the products coming out of the boxes are complete and harmless.
make sure it is.
If you have purchased more than one product, without completing the assembly of a single product,
Do not cause confusion by opening the second product.
Before starting the installation, wipe each part with a slightly damp cloth and start the installation.
You can start.
Please do not use your furniture for other than its intended purpose.

PARÇA KODU	PARÇA ADI	ADET
1	LOWER TABLE	1
2	TOP TABLE	1
3	RIGHT SIDE TABLE	1
4	LEFT SIDE TABLE	1
5	DIVIDE	2
7	COVER	1
12	DRAWER RIGHT SIDE	2
13	DRAWER LEFT SIDE	2
14	DRAWER REAR	2
15	DRAWER FRONT	2
17	DRAWER BOTTOM	2
18	BACKREST	1

In case you need a sparepart, please indicate "Model Code" and "Accessory Code" shown in the assembly instructions.

MATERIAL PICTURES

Code / Items	Kod Code	Adt. Piece
	A (FIX SCREW)	24
	B (FIX LOCK)	24
	C (FIX PLUG)	24
	D (Ø8mm PLS. DOWEL)	16
	E (3,5*18 CHIPBOARD SCREWS)	48
	H (FLAT HINGE)	6
	E1 (3,5*25 CHIPBOARD SCREWS)	13
	G (Ø*30 CABIN SCREW)	8
	I (HANGER PIPE)	1
	K (HANGER FLANGE)	2
	L (RAIL 35CM)	2Tk.

LET'S PAY ATTENTION TO THE CODE AND LOCATION OF THE MATERIALS WHEN POSITIONING

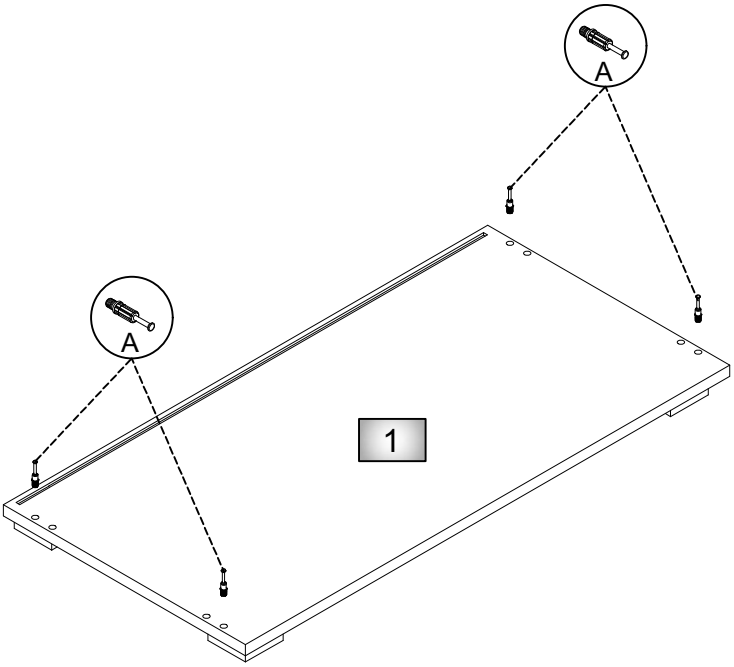
A
A
1

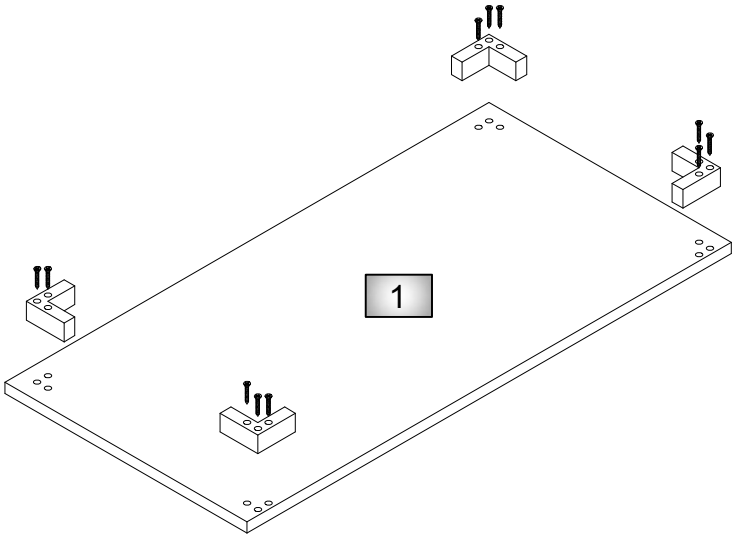
1

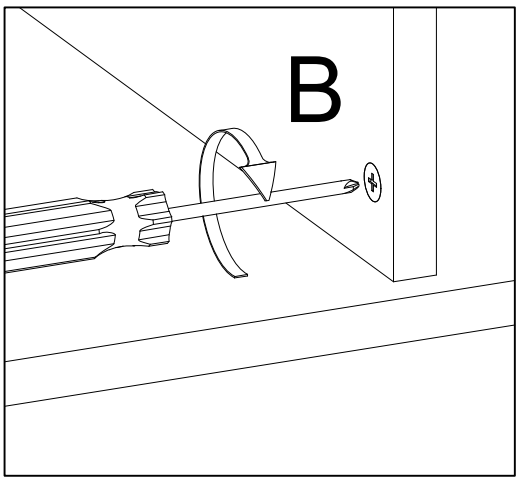
B

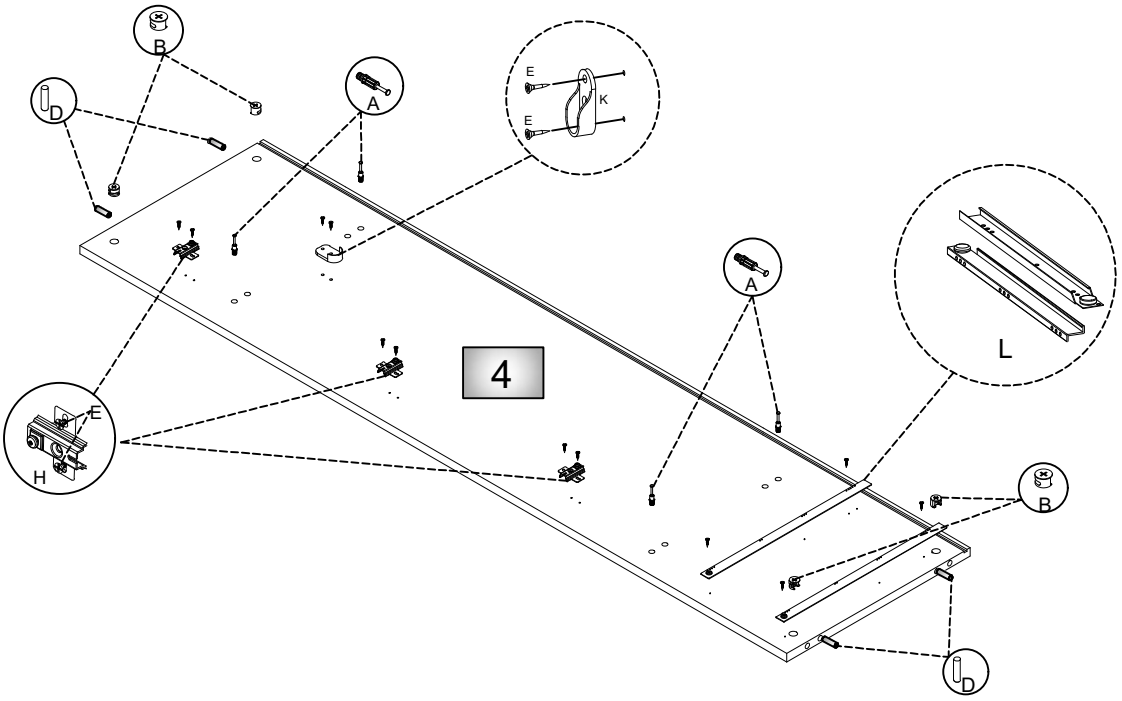
B
D
A
E
K
E
A
L
4
E
H
B
D

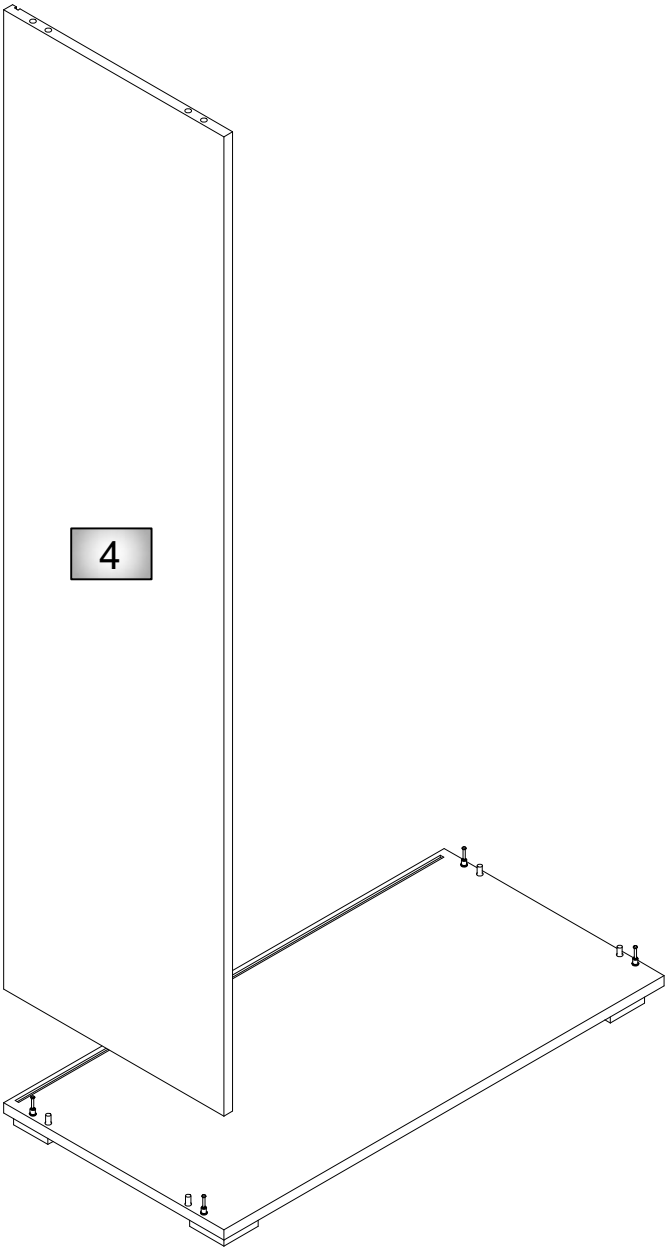
4

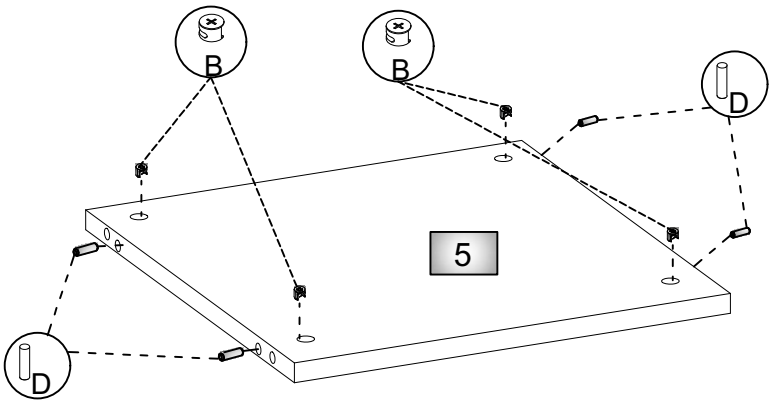
B
B
D
5
D

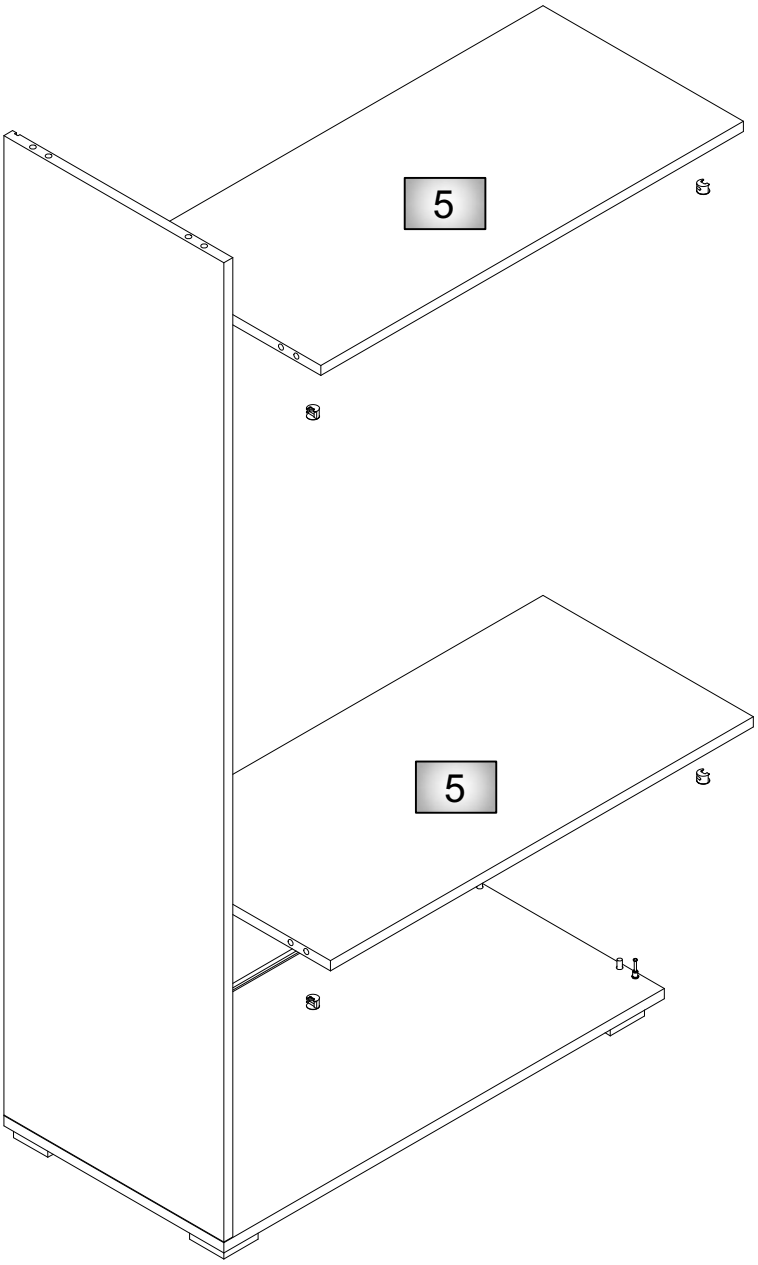
5
5

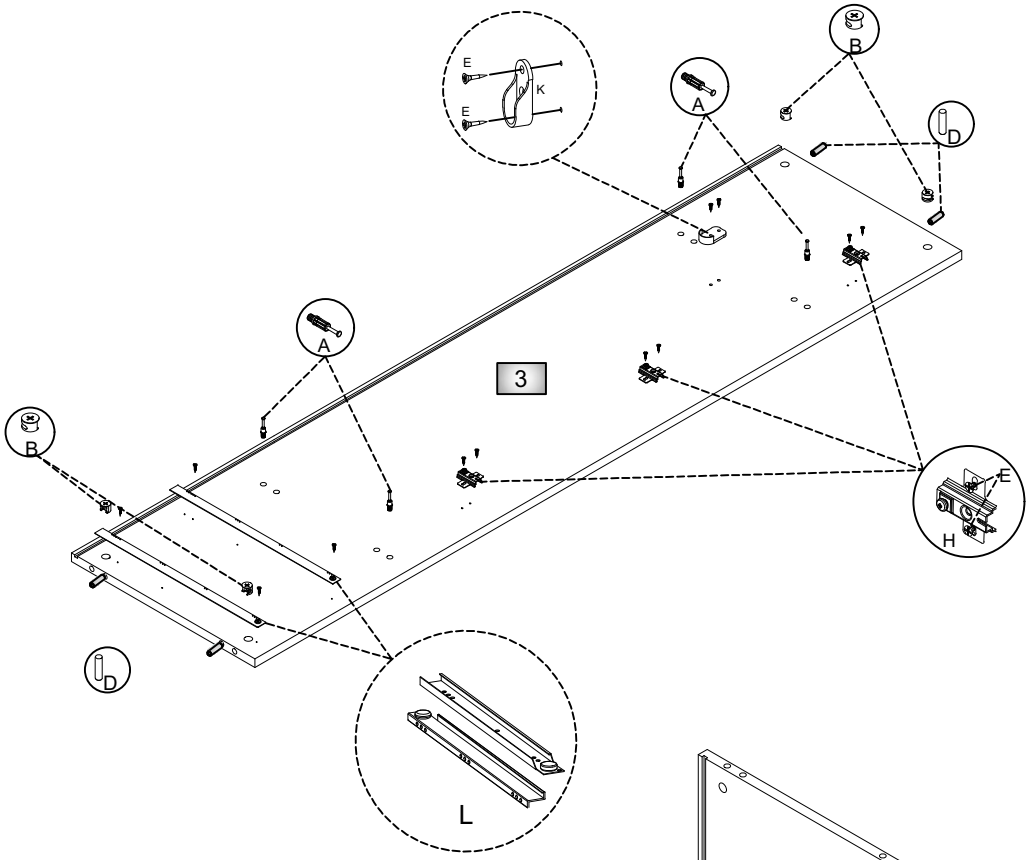
E
K
E
A
B
D
A
3
B
E
H
D
L

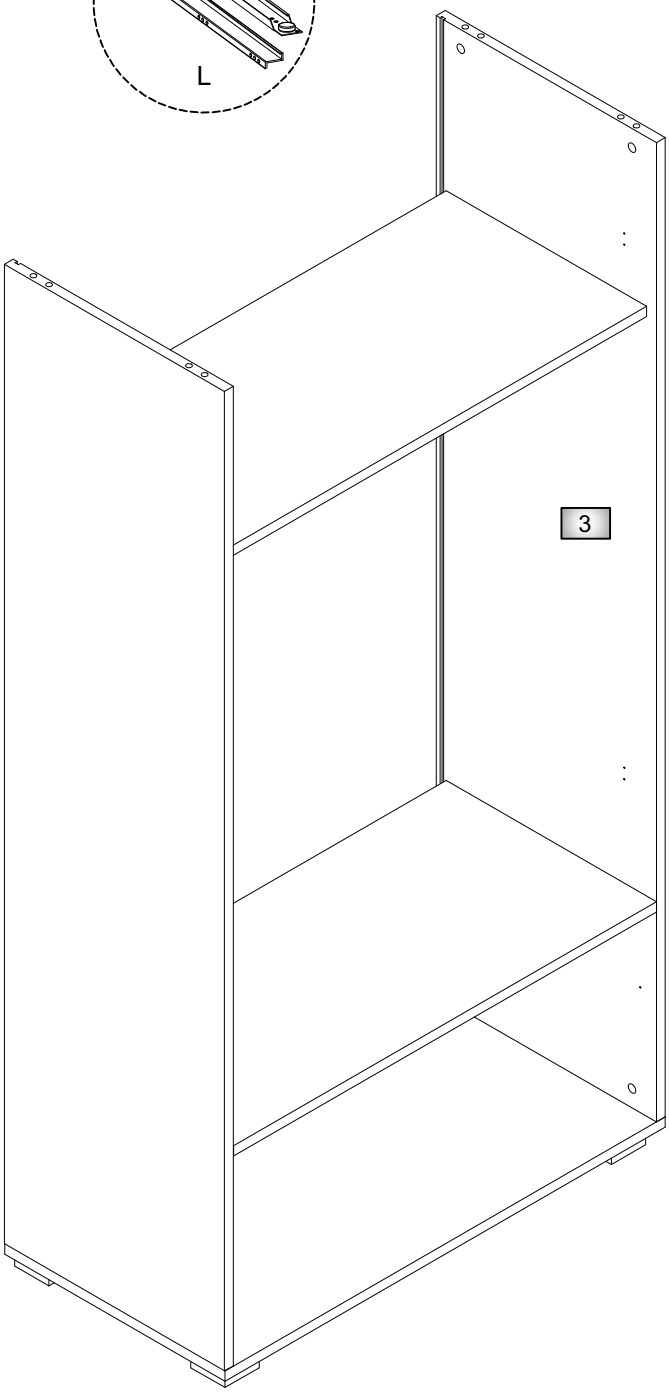
3

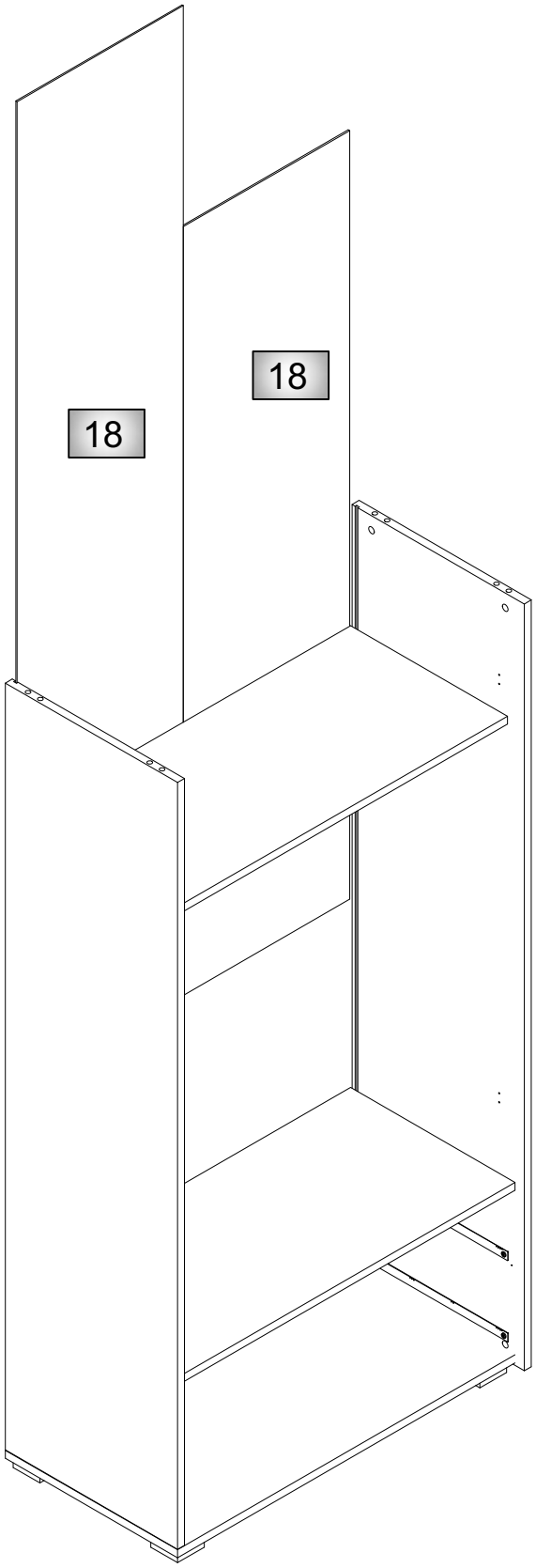
18
18

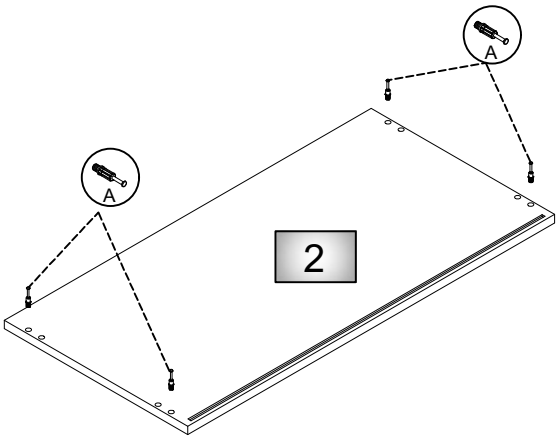
A
A
2

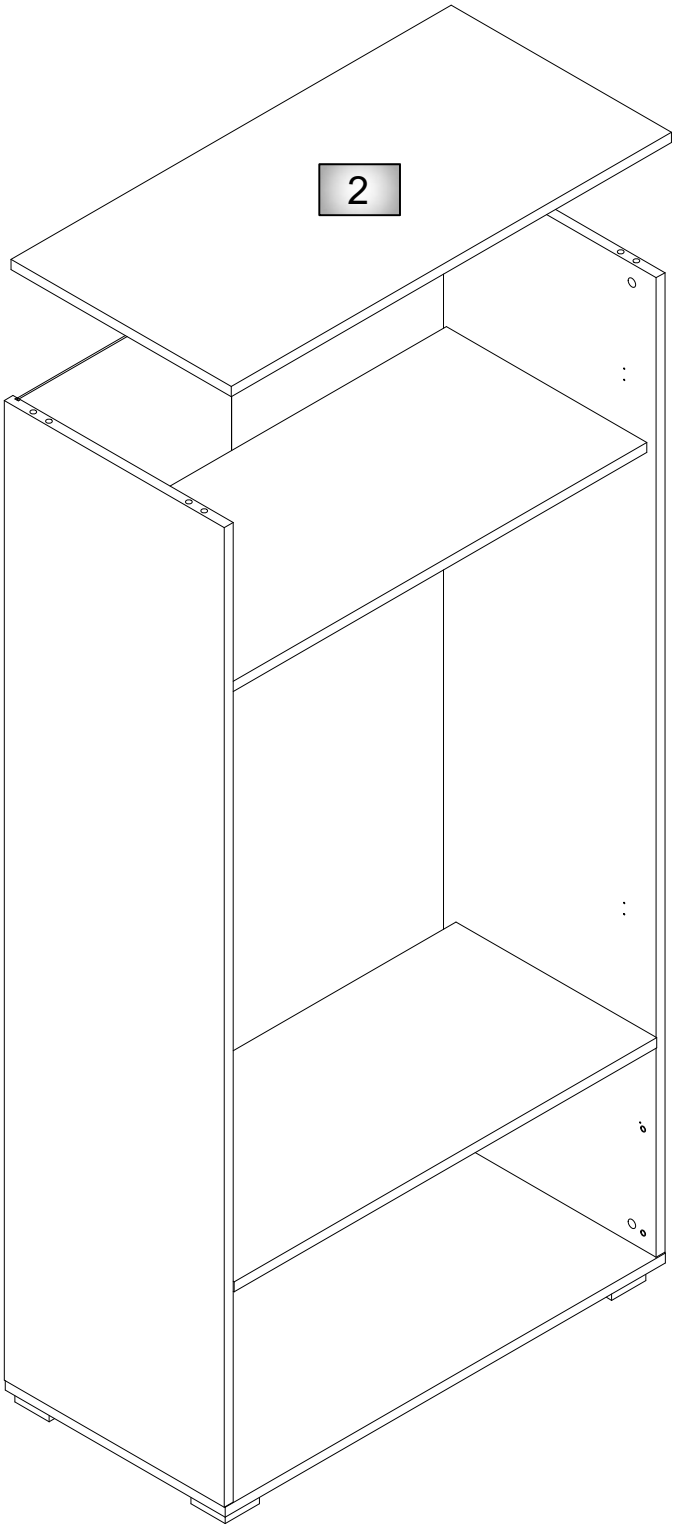
2

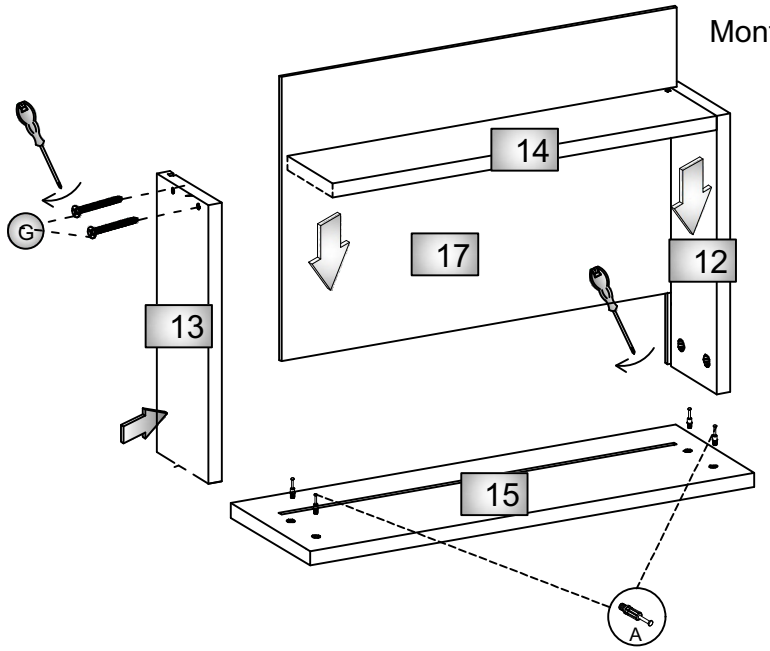
G
13
14
17
12
15
A

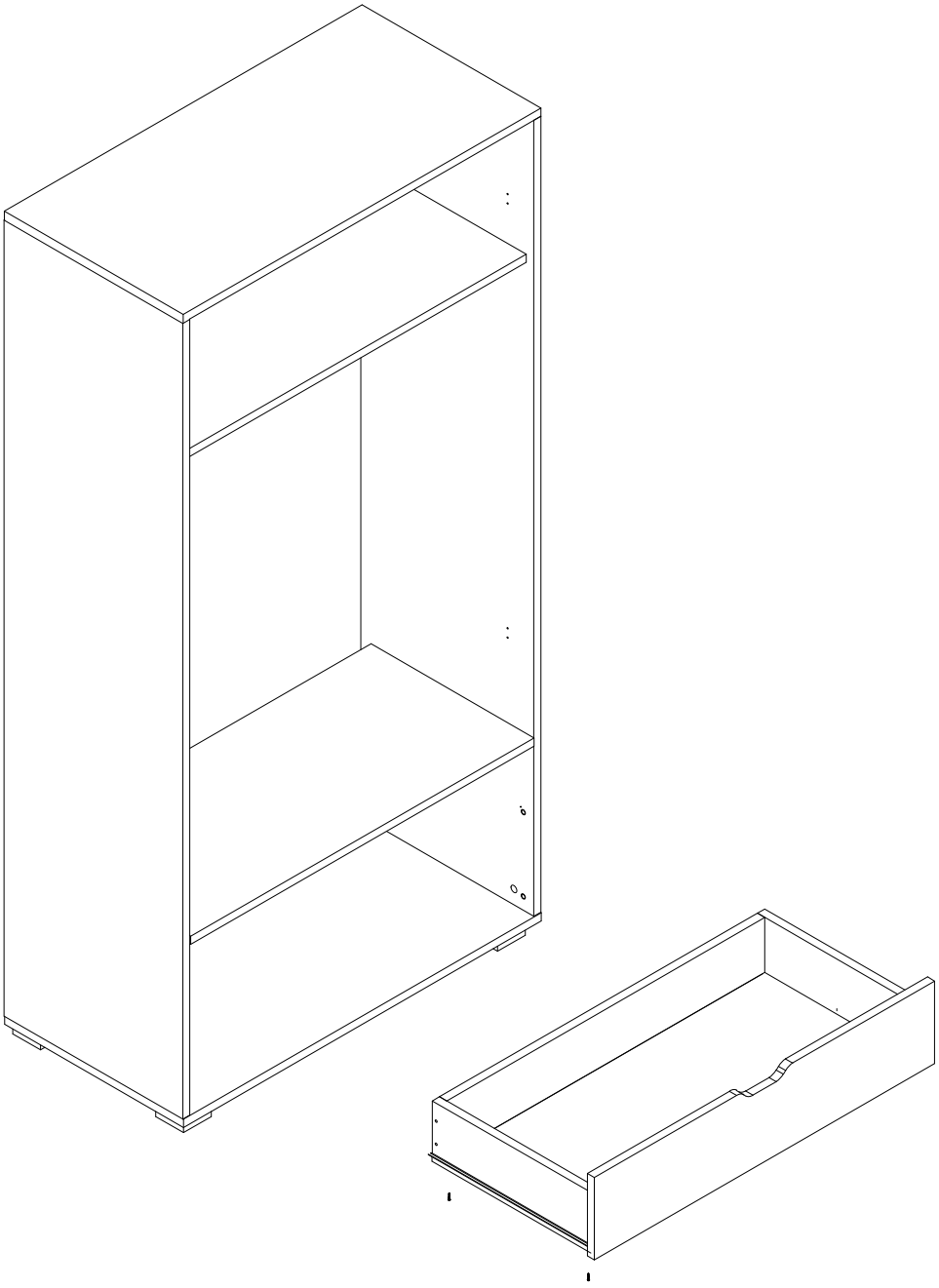

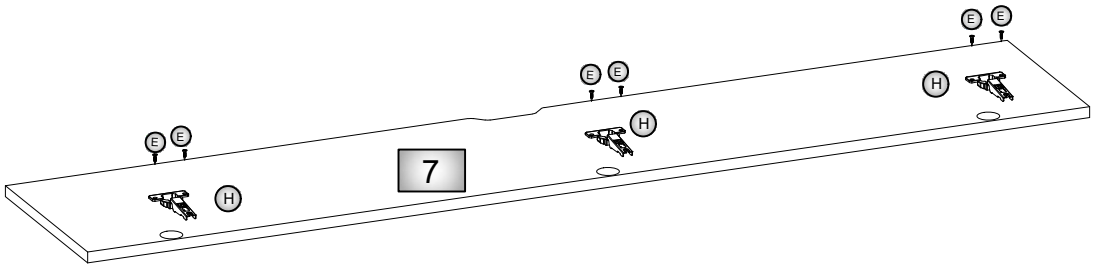
E
E
E
E
E
E
H
H
H
7

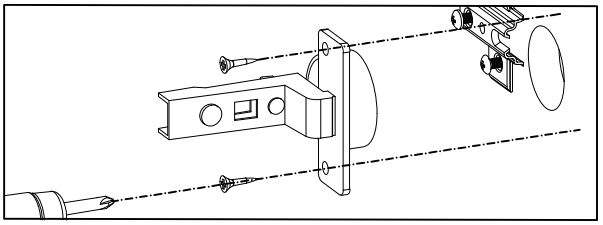

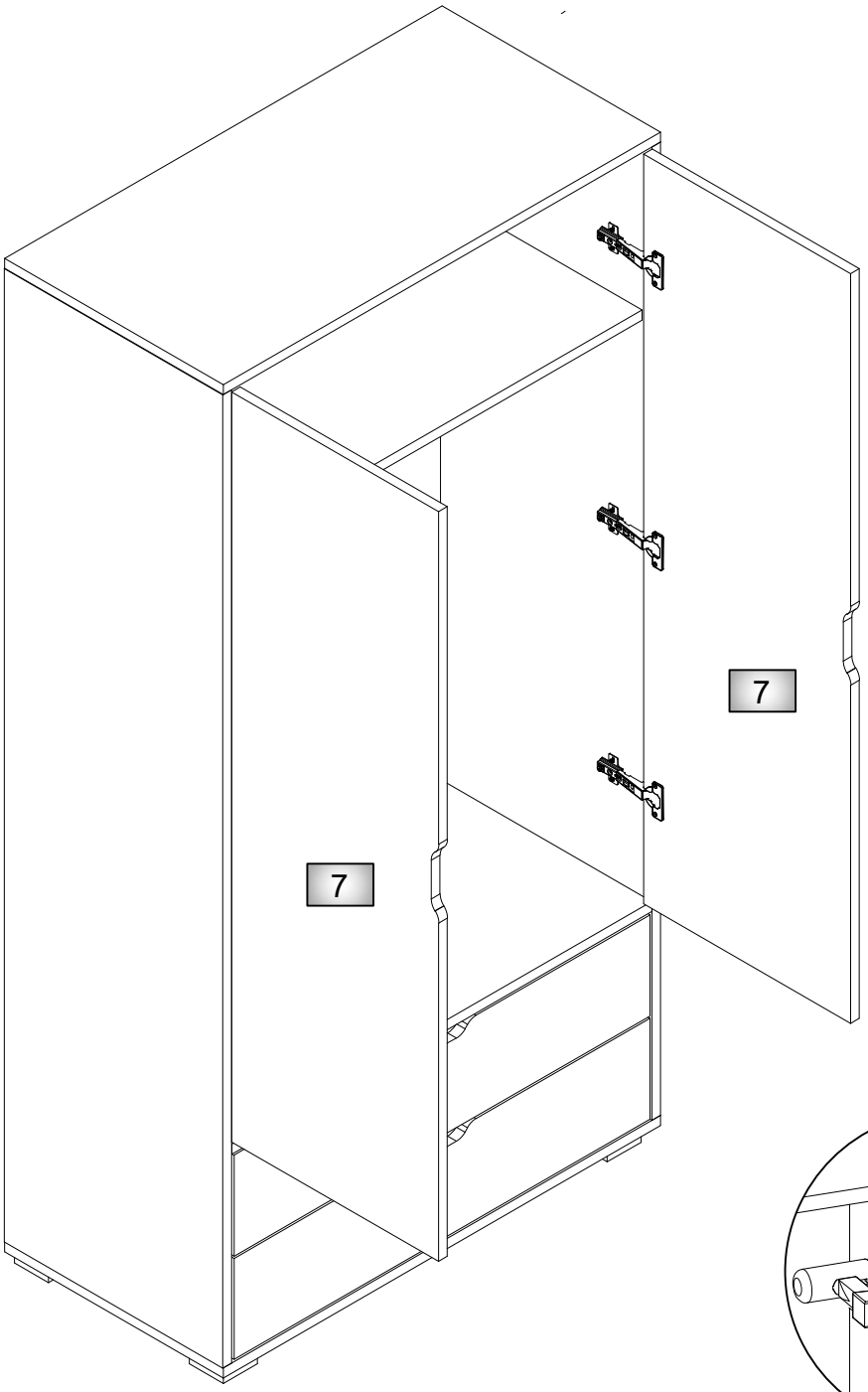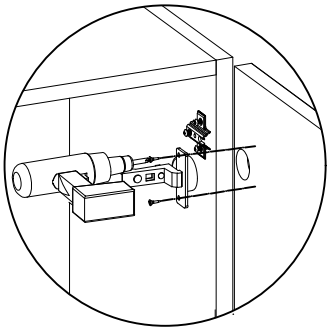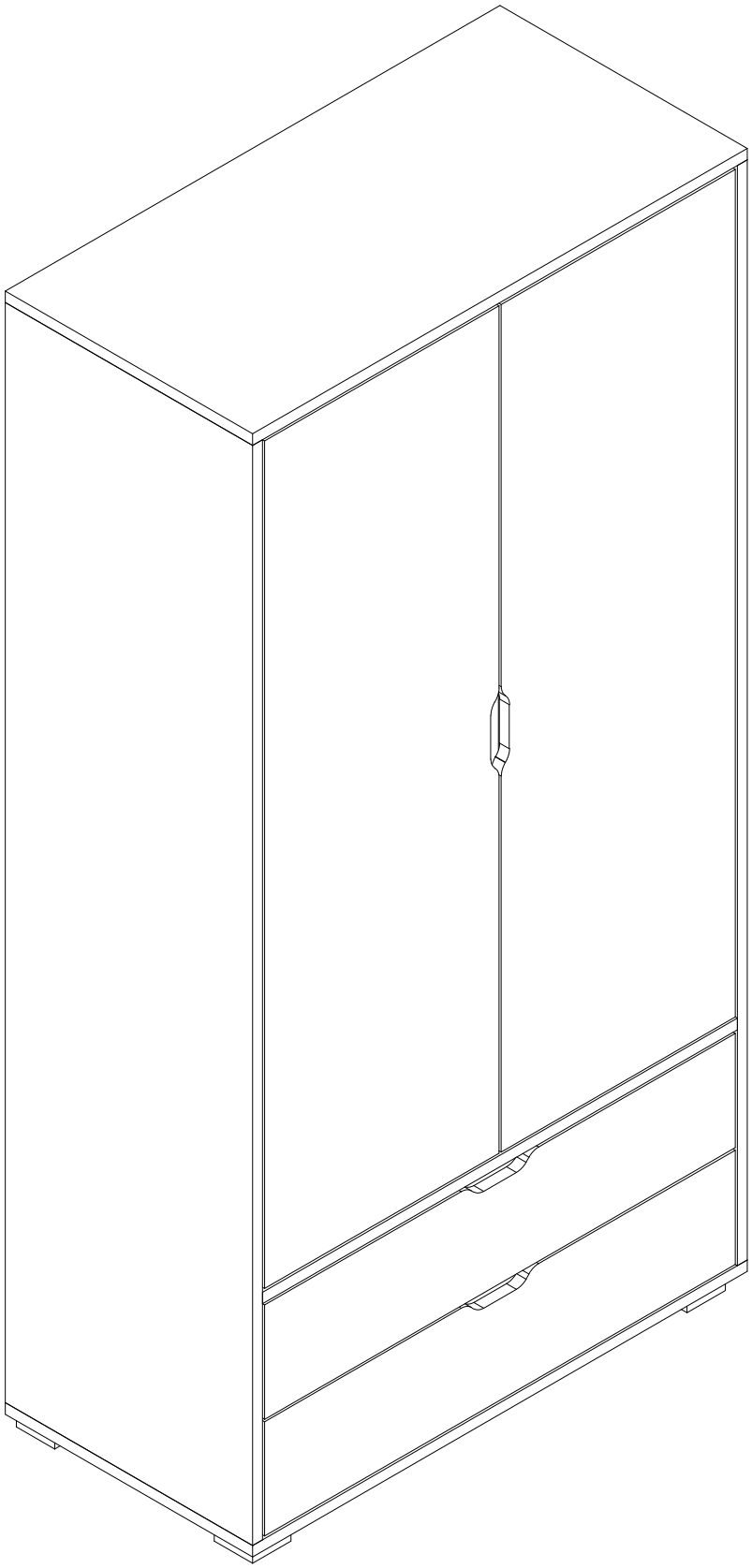
7
7