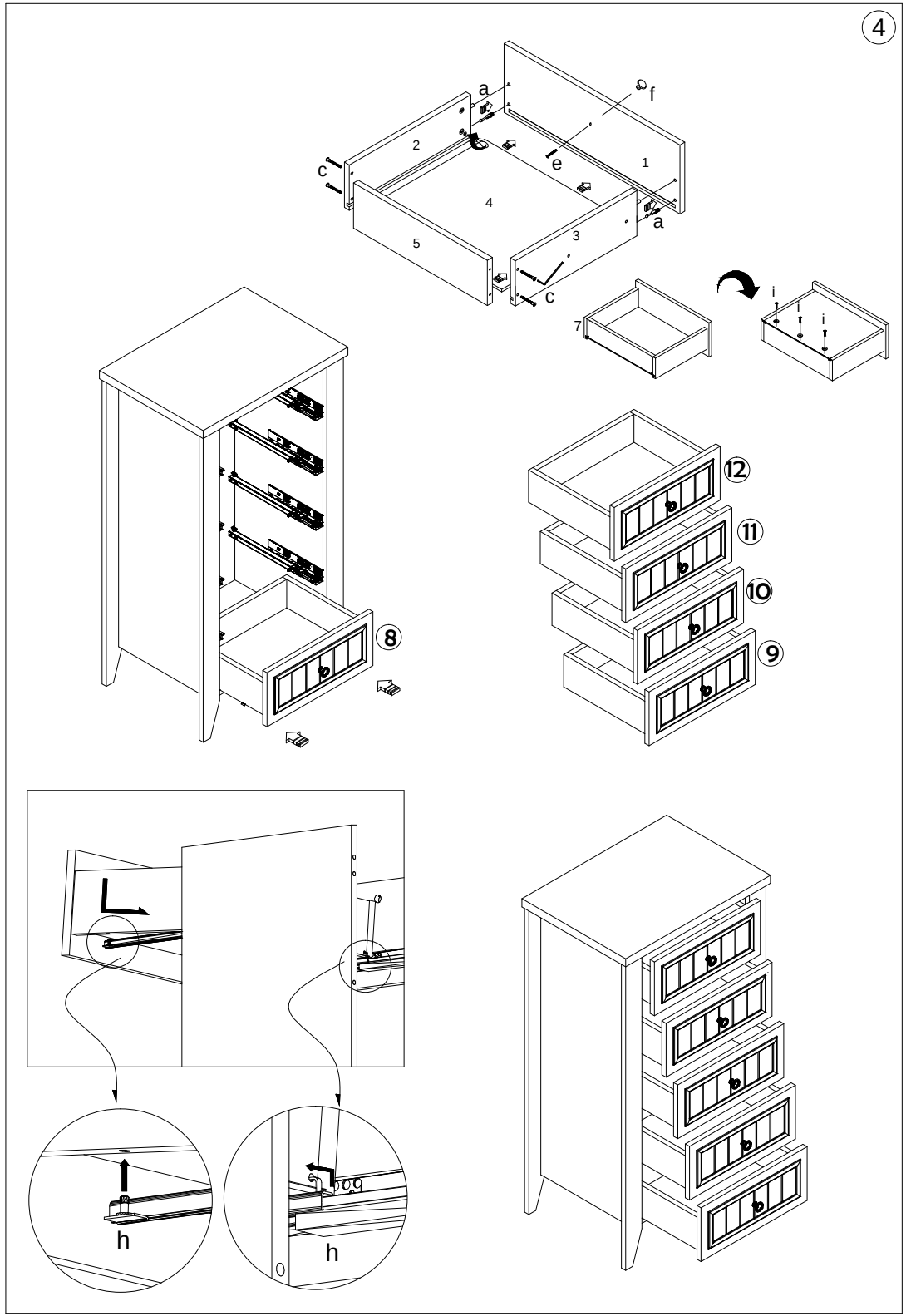
4
a
f
2
e
1
c
4
a
5
3
c
7
i
i
i
8
12
11
10
9
h
h

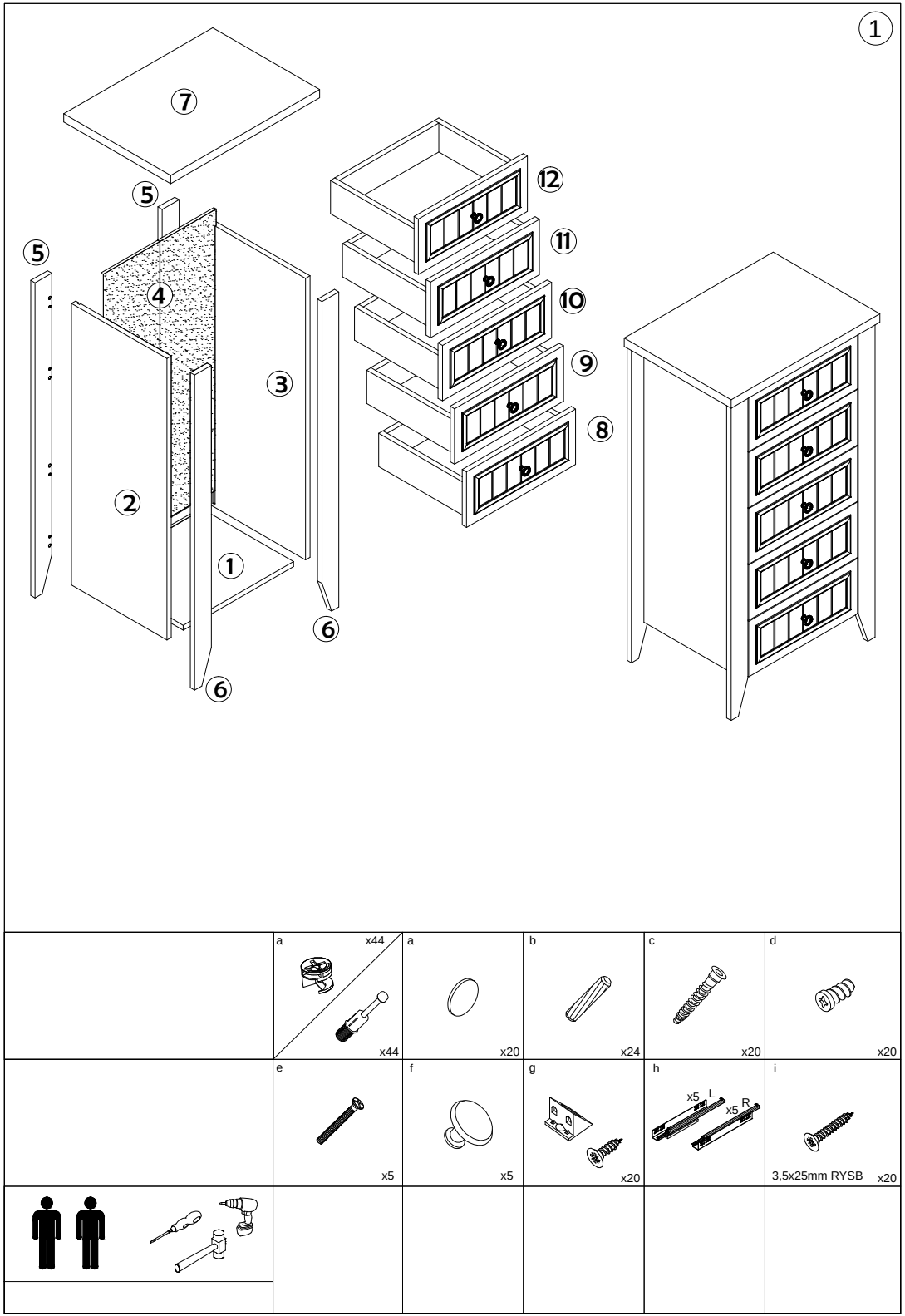
1
7
5
12
5
11
4
10
3
9
8
2
1
6
6
a x44
x44
a x20
b x24
c x20
d x20
e x5
f x5
g x20
h x5 L x5 R
i 3,5x25mm RYSB x20

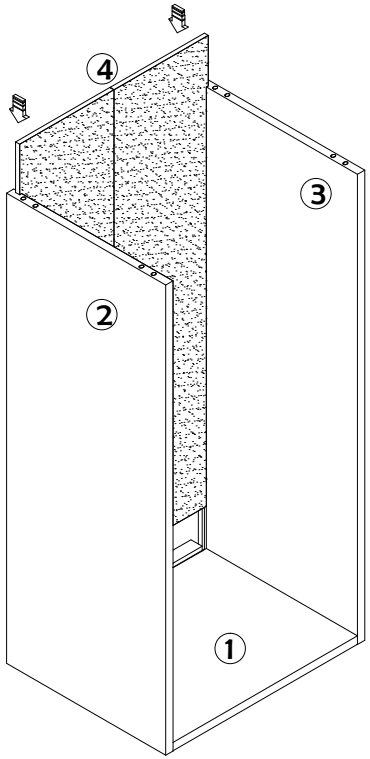
4
3
2
1

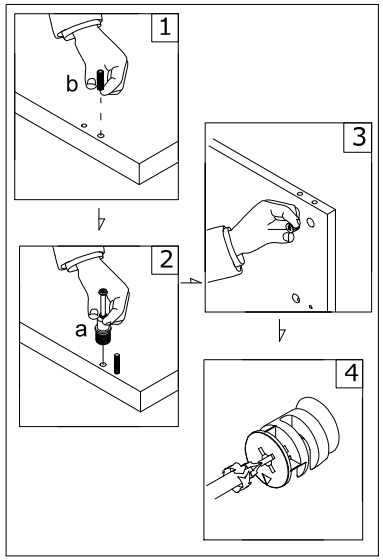
2
1
b
2
a
3
4

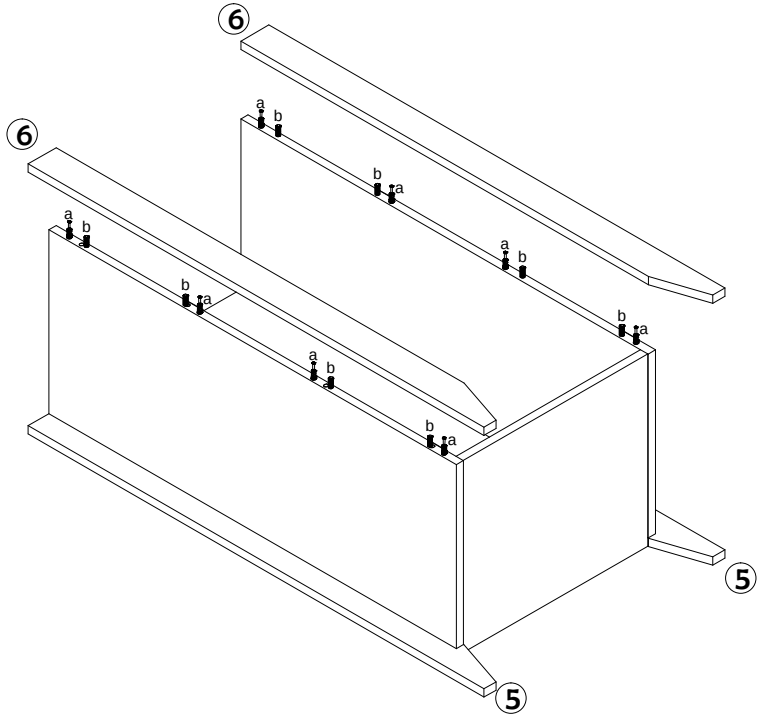
6
6
a
b
b
a
a
b
b
a
a
b
b
a
a
b
b
a
5
5

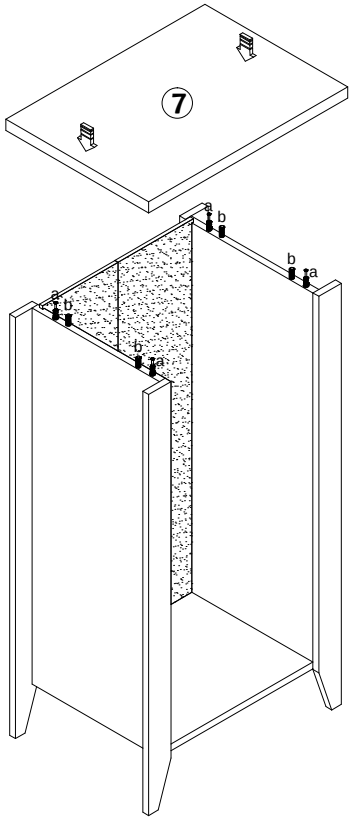
7
a
b
b
a
a
b
b
a

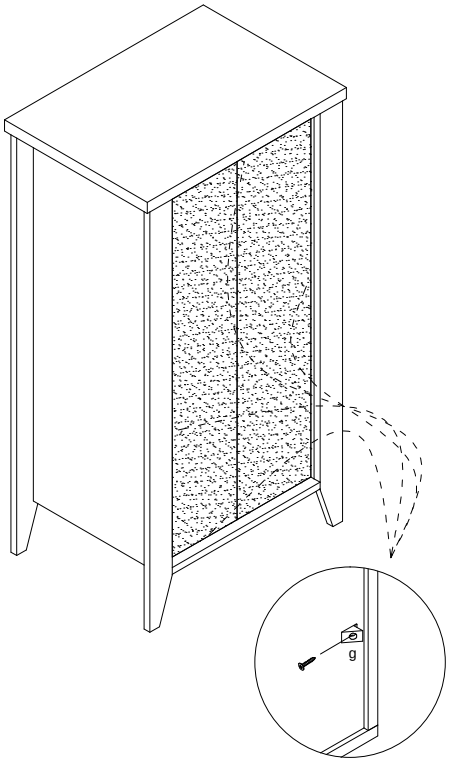
g

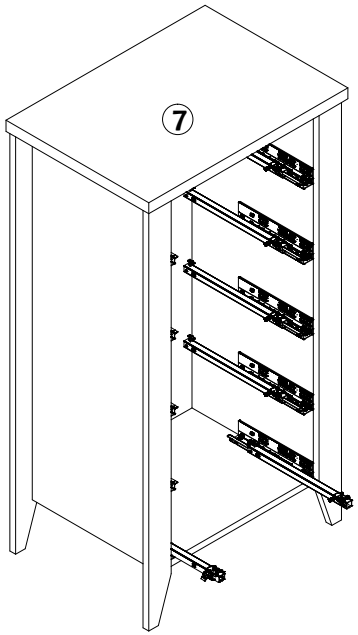
7

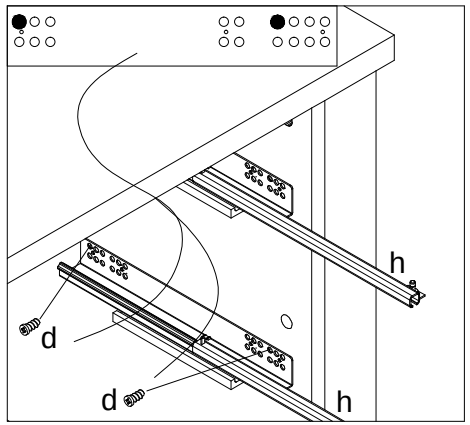
h
d
d
h