BELLA

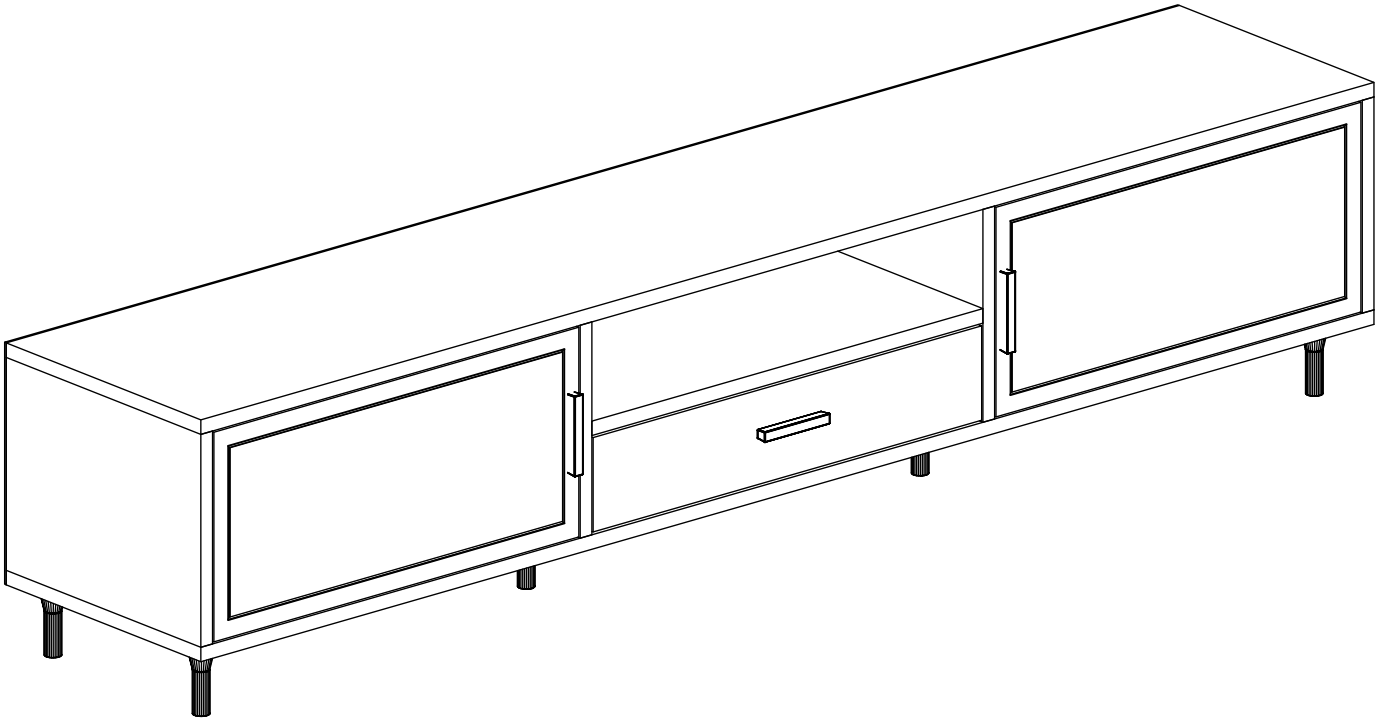

Dear Customer,

We design and produce our products for people to love and have fun with them as we do.
The product you bought was subjected to all sorts of tests and control before sending out to you.

Before start assembling, please check the whole components and accessories according to the lists. If you bought more than one product, to prevent confusion be sure that you completed the first product. Then start the other product's assembling.

Before start assembling, please clean all the components with a damp cloth.
Also for usual cleaning, this will be enough.

Although all the products are produced and packed carefully,sometimes happen that some component is damaged during the transportation. In such a case please check the missing or damaged part and do not hesitate to contact us. You can send e-mail to memetguzel178@gmail.com or reach us at 0542 400 96 70

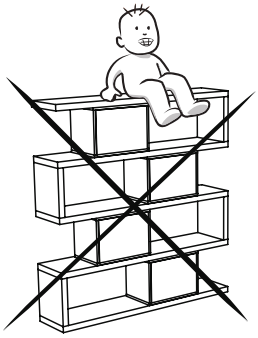

Do not use your furniture for out of purposes.
If you would like to use it, please contact us for further questions.

Do not directly contact your furniture with excessive heat, cold and humidity because the product can be affected..

ATTENTION !!

Minifix is the main connection material used in products. Before starting assembly, please check the drawings below.

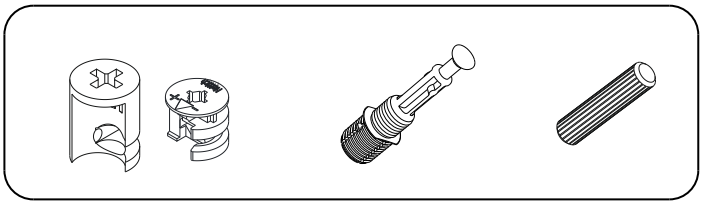

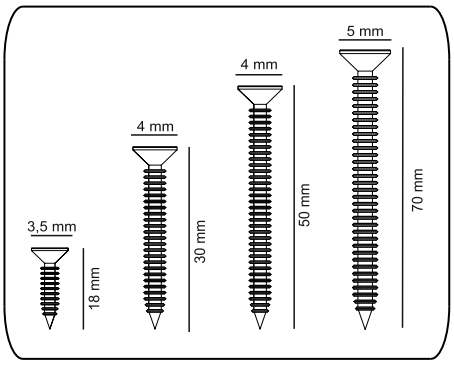

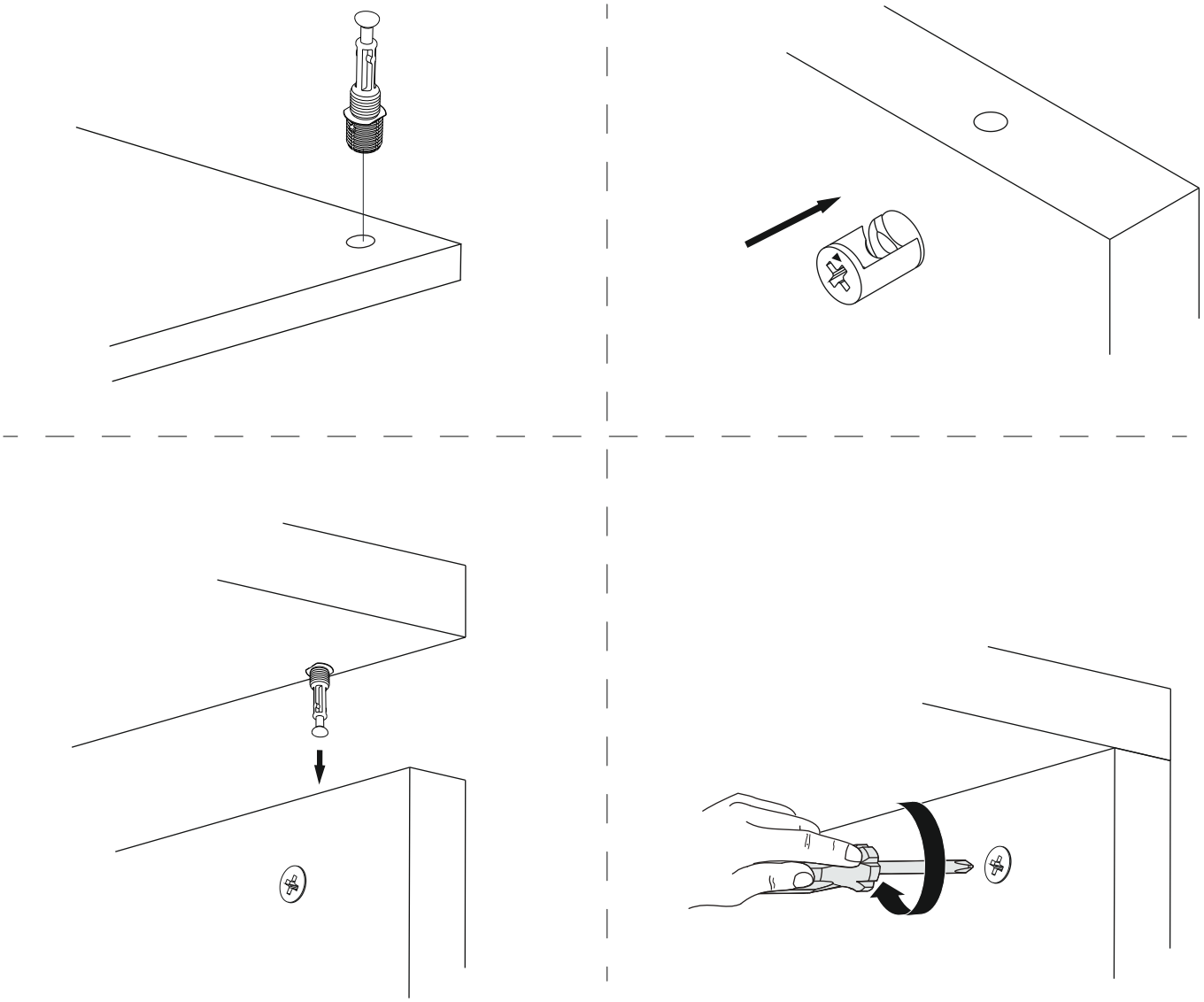

ACCESSORY LIST

BELLA

A23 Minifix M8 24x	A22 Minifix G18 24x	A04 KVLY 20x	C02 SDM 4x	C04 MA 4x
A48 AC 50x	A17 4x50 4x	A18 3,5x18 28x	A60 KPKSTPR BYZ 2x	R02 CRY 30 cm 1T
A06 18 mm BYZ 24x	K19 KULP 10cm GOLD 3x	A47 AYAK 12cm ANTRST-GOLD 6x	A55 CITA 180cm GOLD 1x	A55 CITA 35cm GOLD 2x
				A41 4x30 6x

GENERAL VIEW

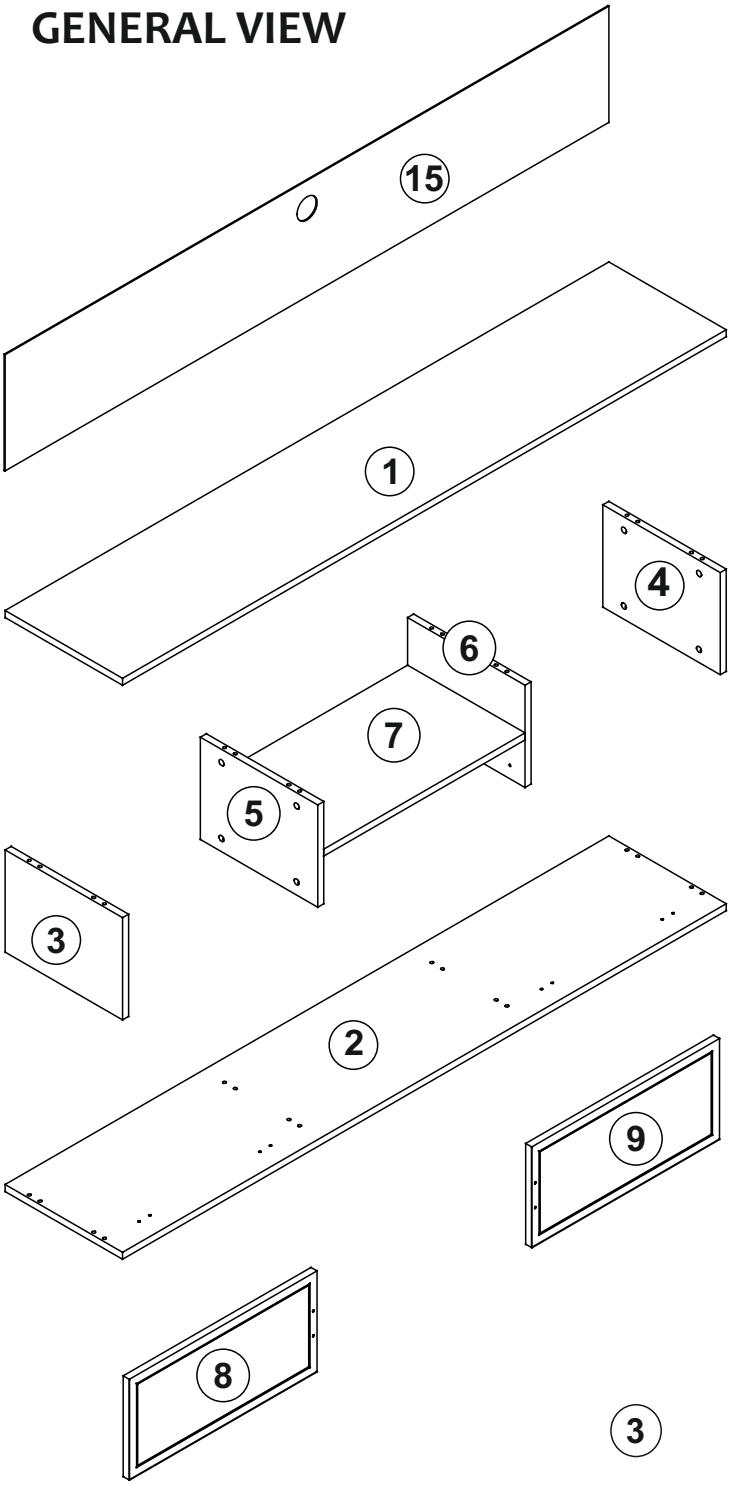

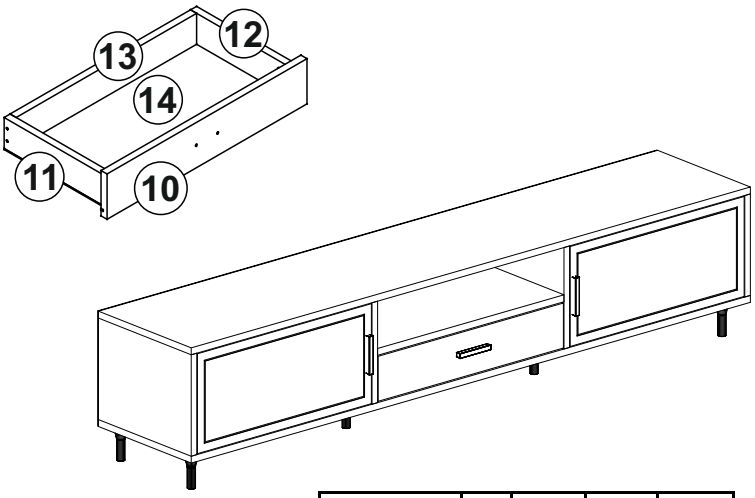

1001.01	1	1800	350	18
1001.02	1	1800	350	18
1001.03	1	264	350	18
1001.04	1	264	350	18
1001.05	1	264	350	18
1001.06	1	264	350	18
1001.07	1	600	350	18
1001.08	1	560	260	18
1001.09	1	560	260	18
1001.10	1	596	117	18
1001.11	1	300	80	18
1001.12	1	300	80	18
1001.13	1	538	80	18
1001.14	1	574	306	3
1001.15	1	1796	296	3

1

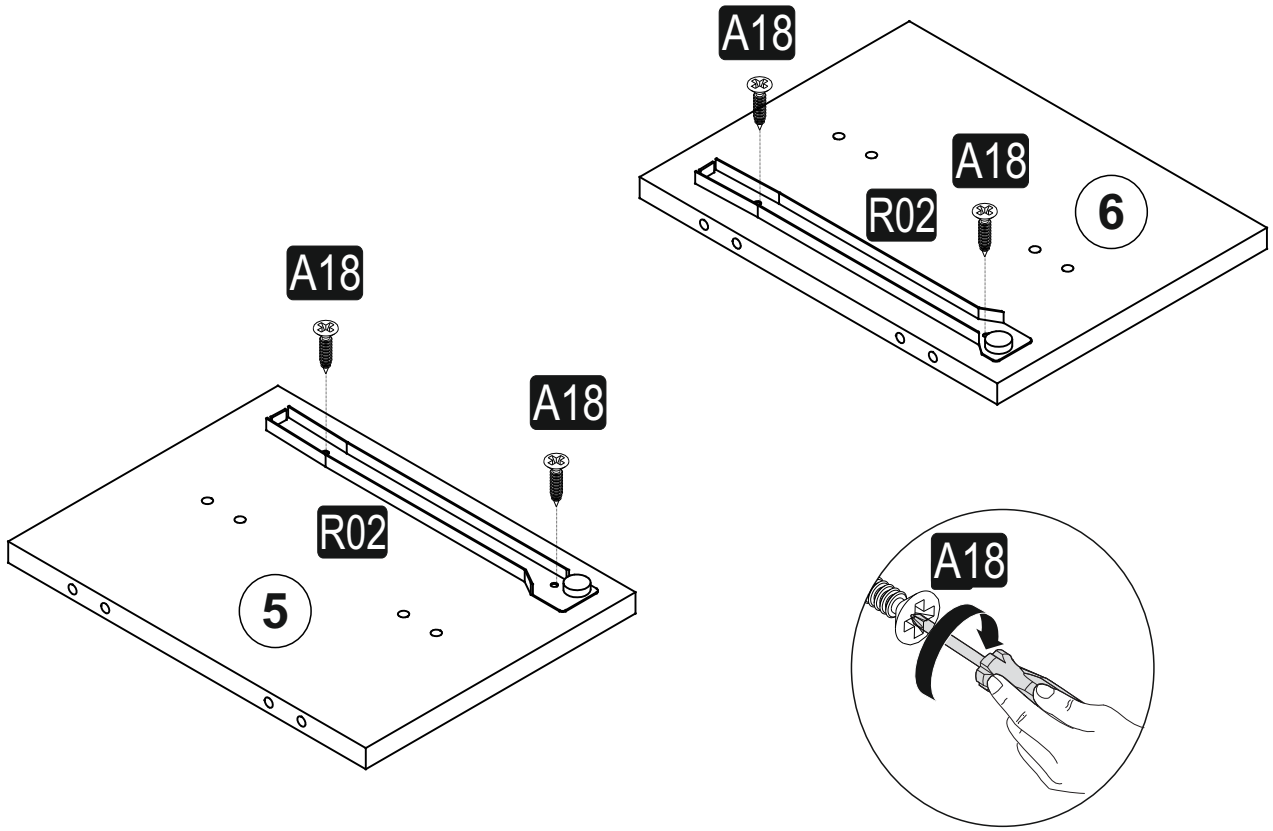
A18
A18
R02
6
A18
A18
R02
5
A18

2

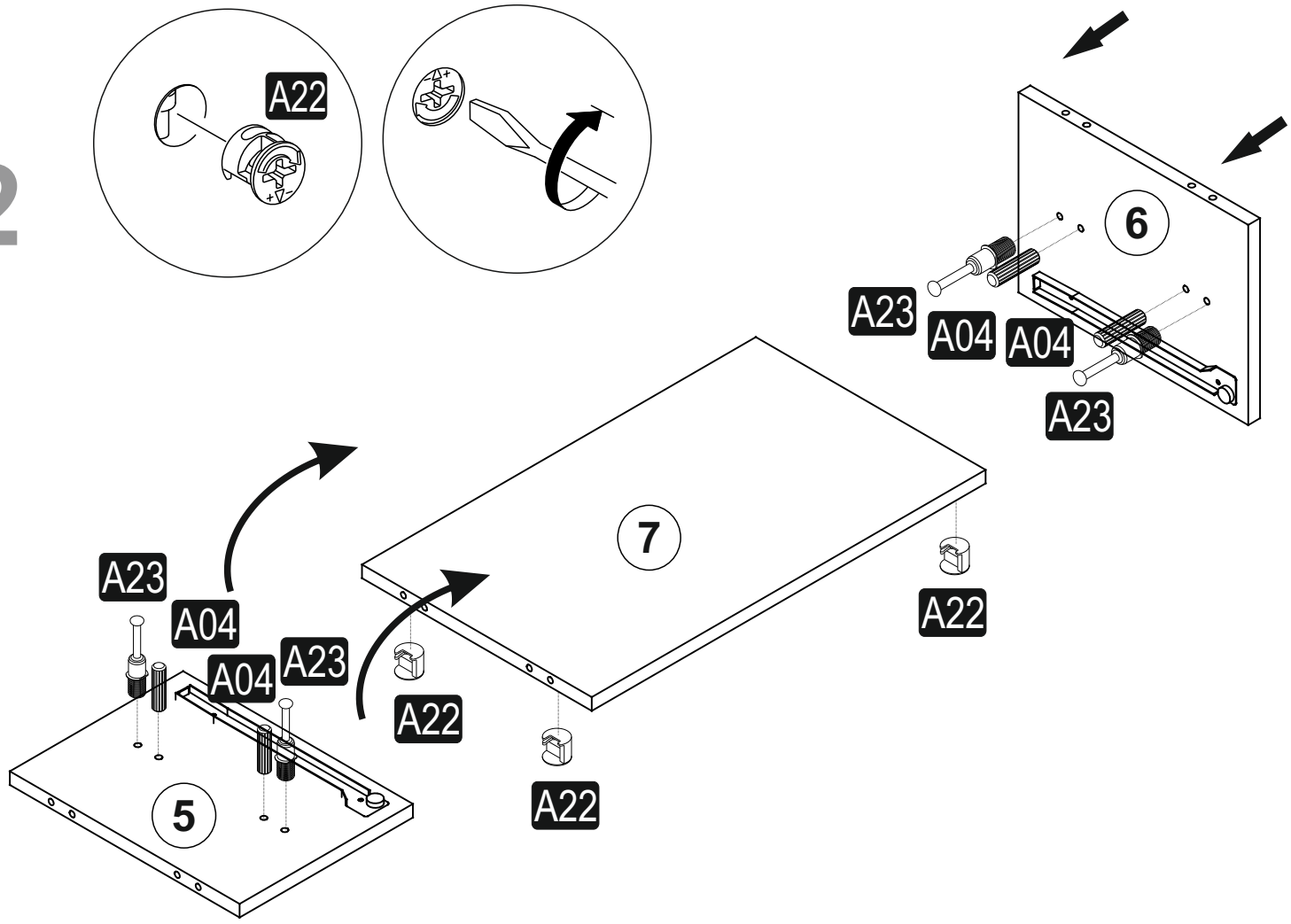
A22
6
A23
A04
A04
A23
7
A23
A04
A04
A23
A22
A22
A22
5

3

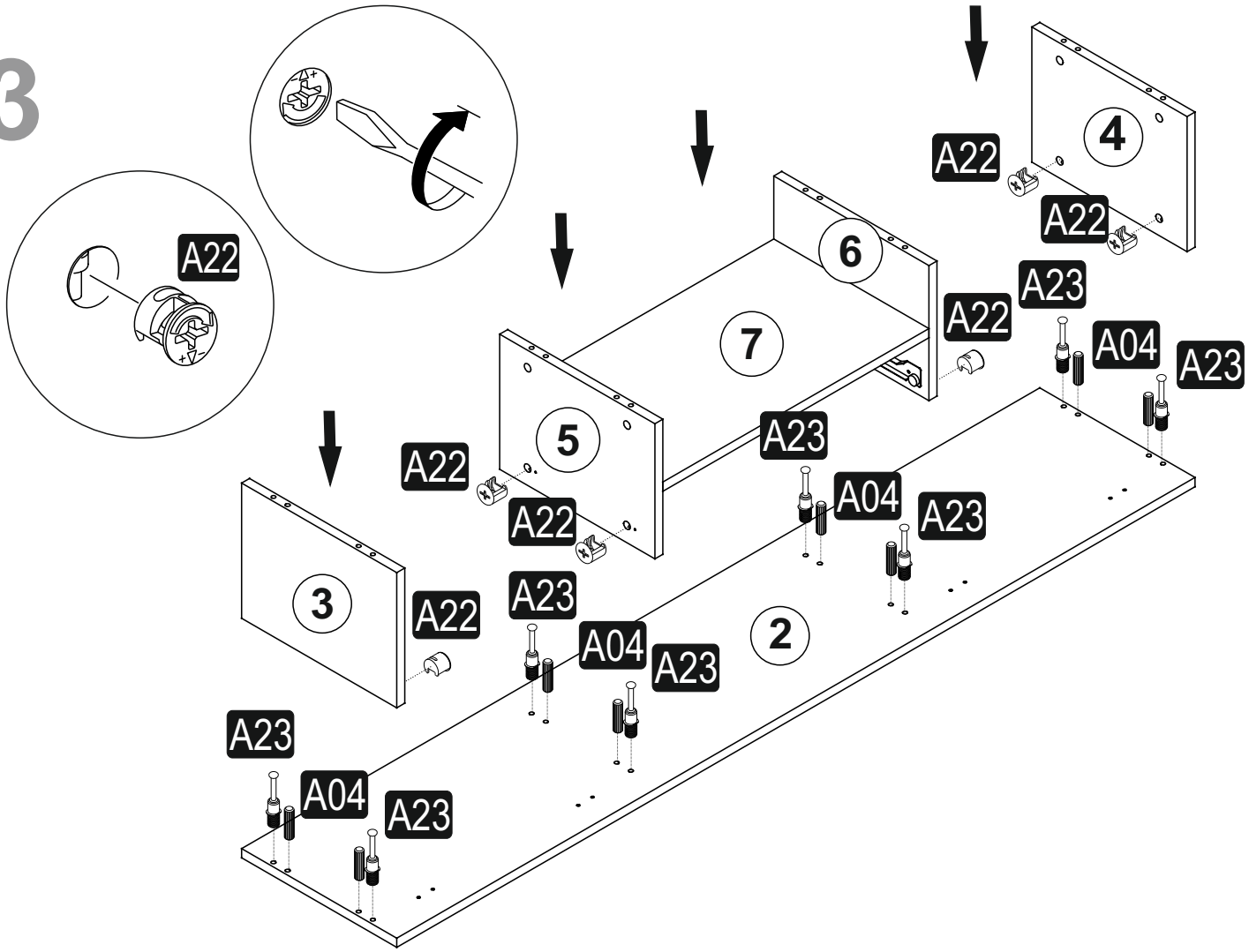
A22
4
A22
A22
6
A23
A22
7
A04
A23
5
A23
A22
A04
A22
A23
3
A22
A23
2
A04
A23
A23
A04
A23

4

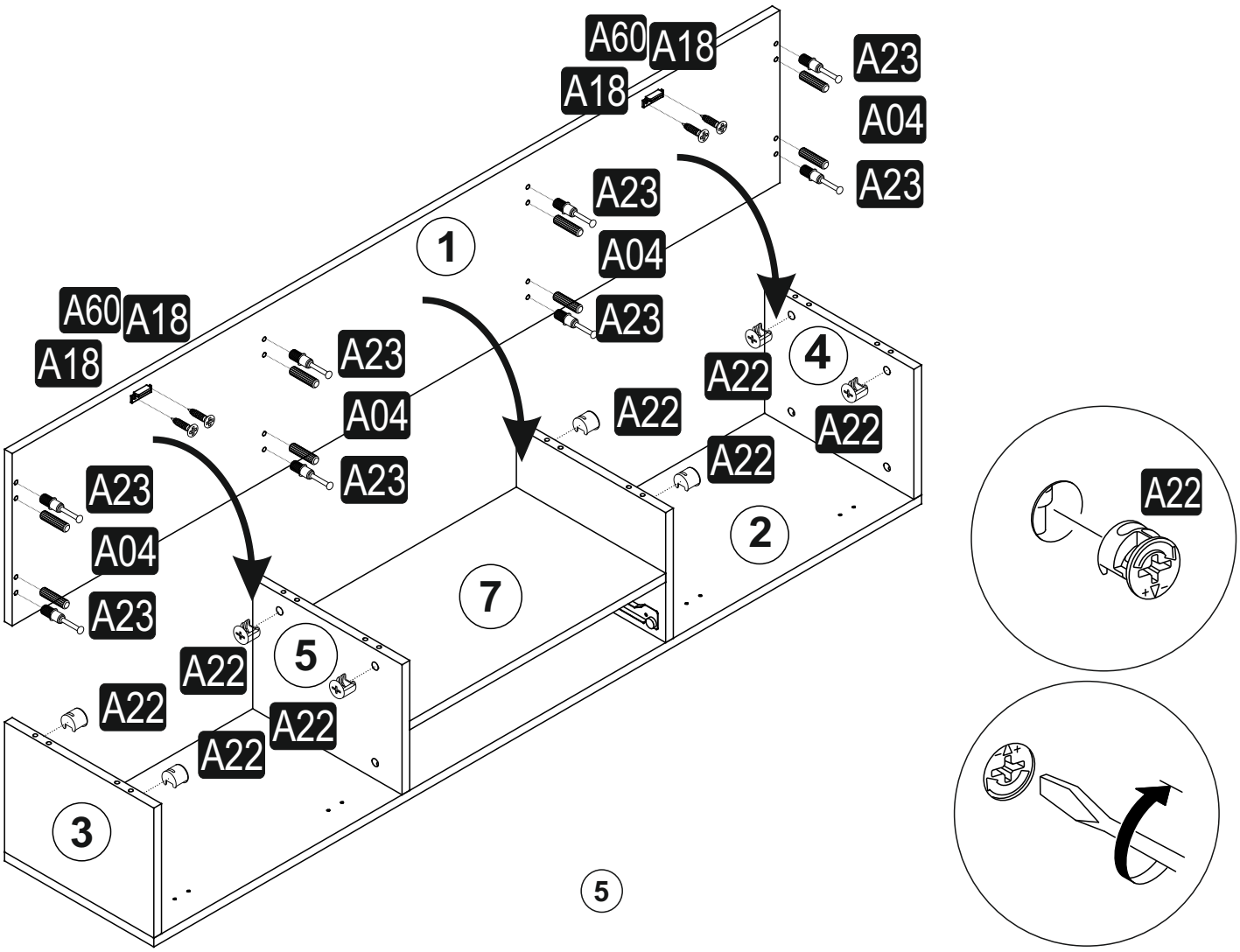
A60
A18
A18
A23
A04
A23
A23
1
A04
A23
A60
A18
A18
A23
4
A22
A04
A22
A22
A23
A22
A23
A04
2
A23
7
5
A22
A22
A22
A22
3
A22

5

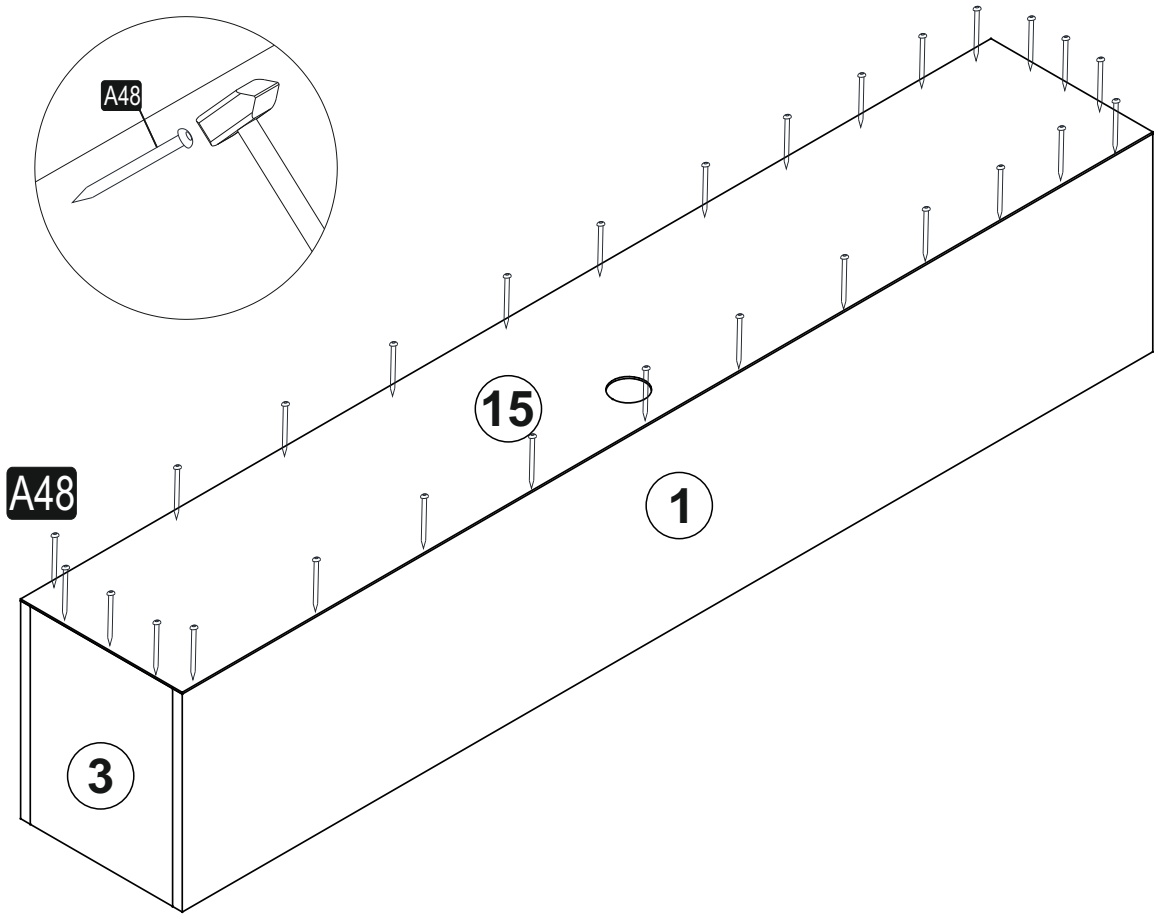

6

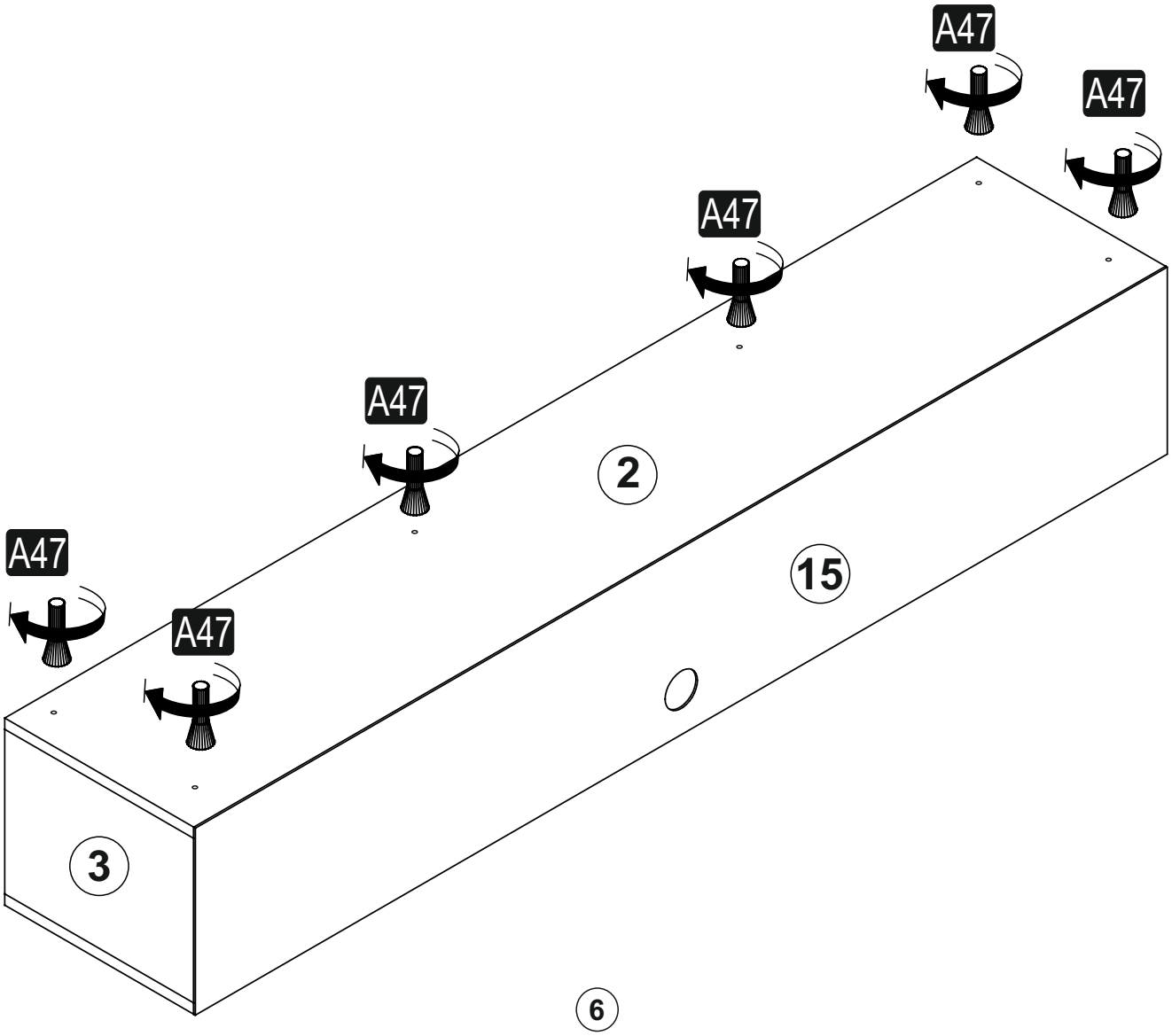

7

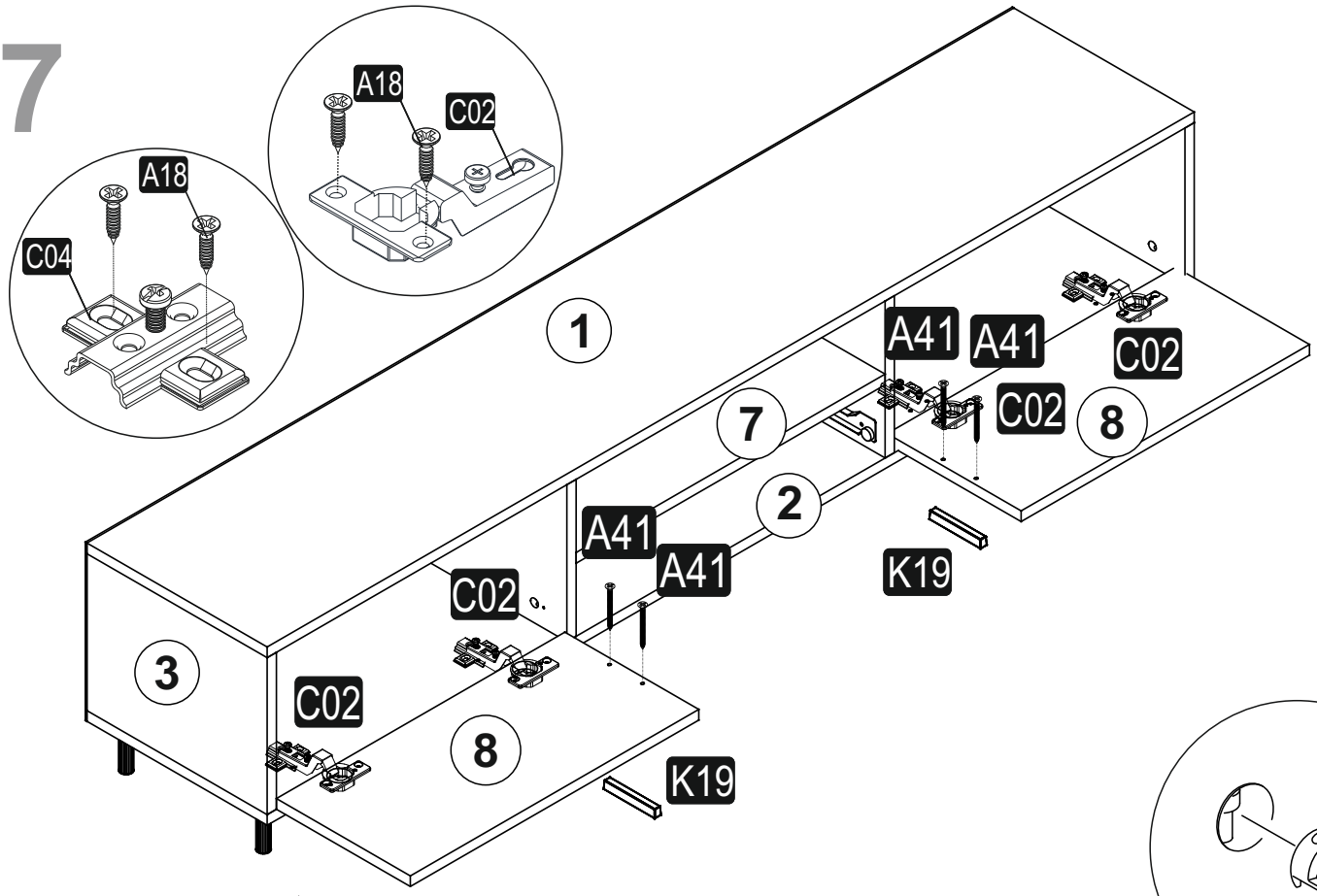
A18
C02
A18
C04
1
A41
A41
C02
C02
7
8
2
A41
A41
K19
C02
3
C02
8
K19

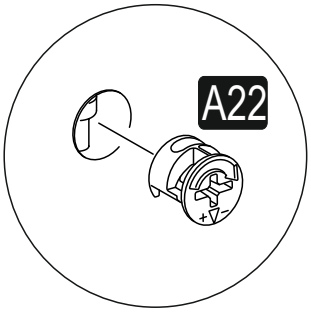
A22

8

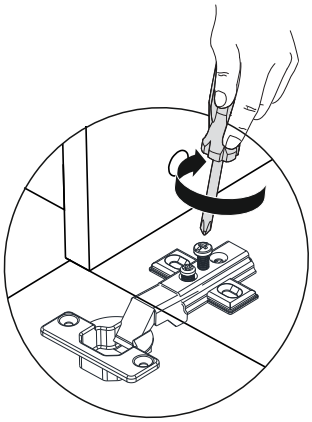

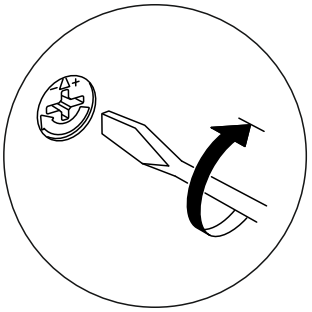

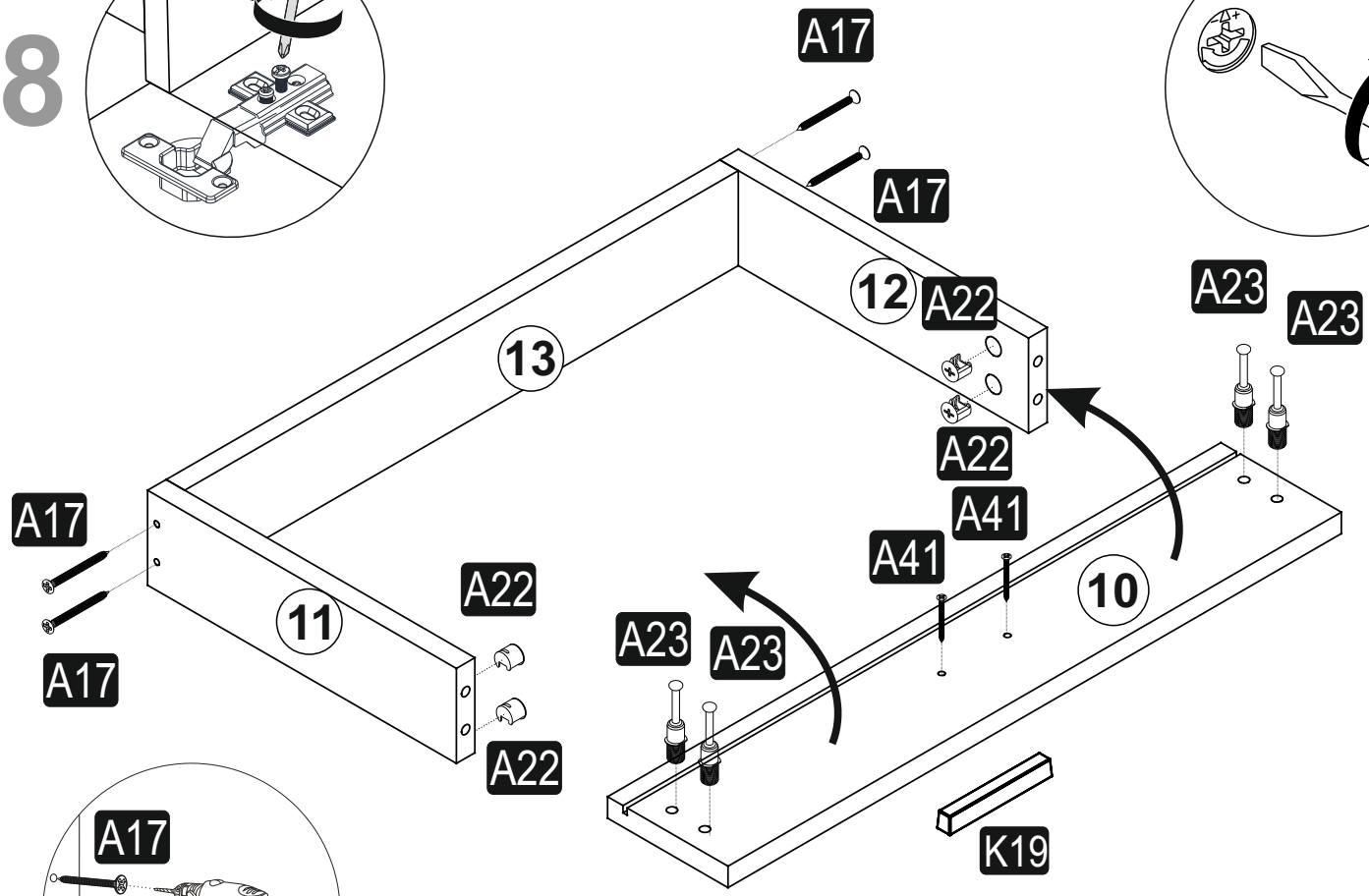
A17
A17
12
A22
A23
A23
13
A22
A41
A41
A17
A17
11
A22
A22
10
A23
A23
K19

A17

9

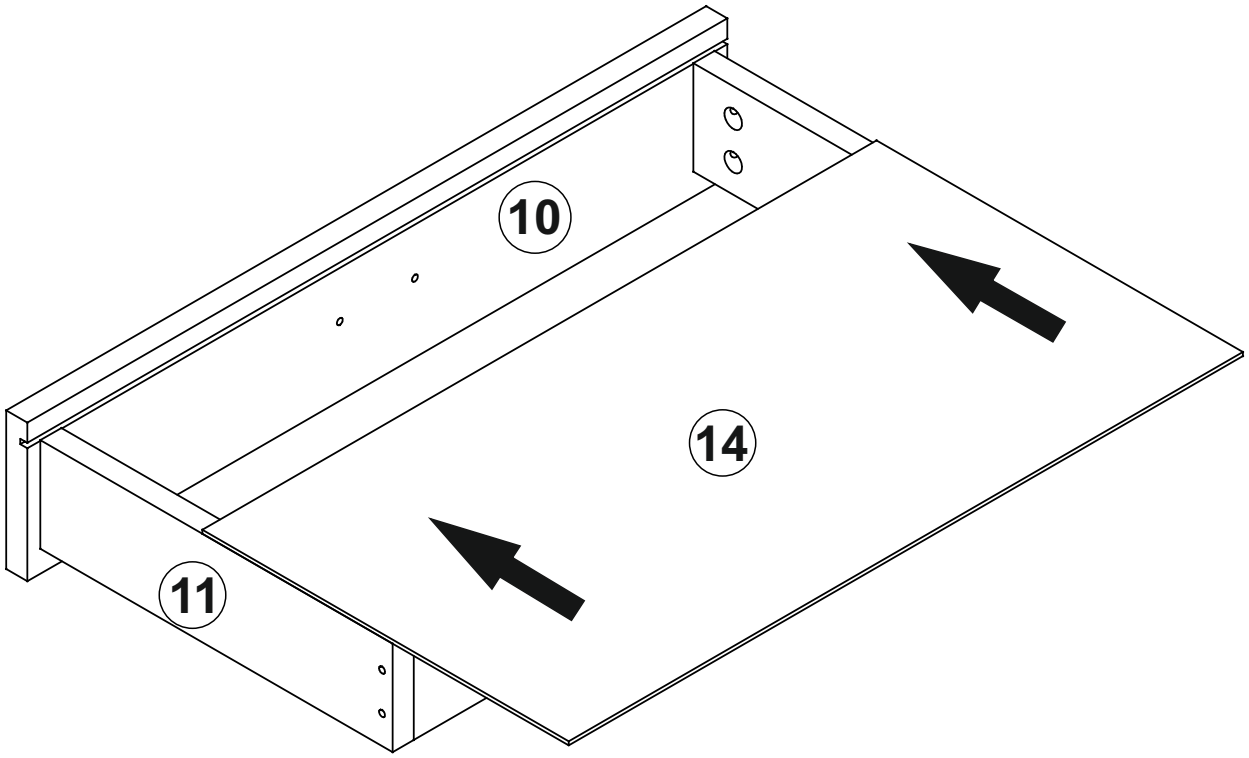

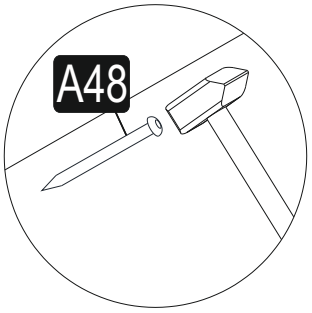

10

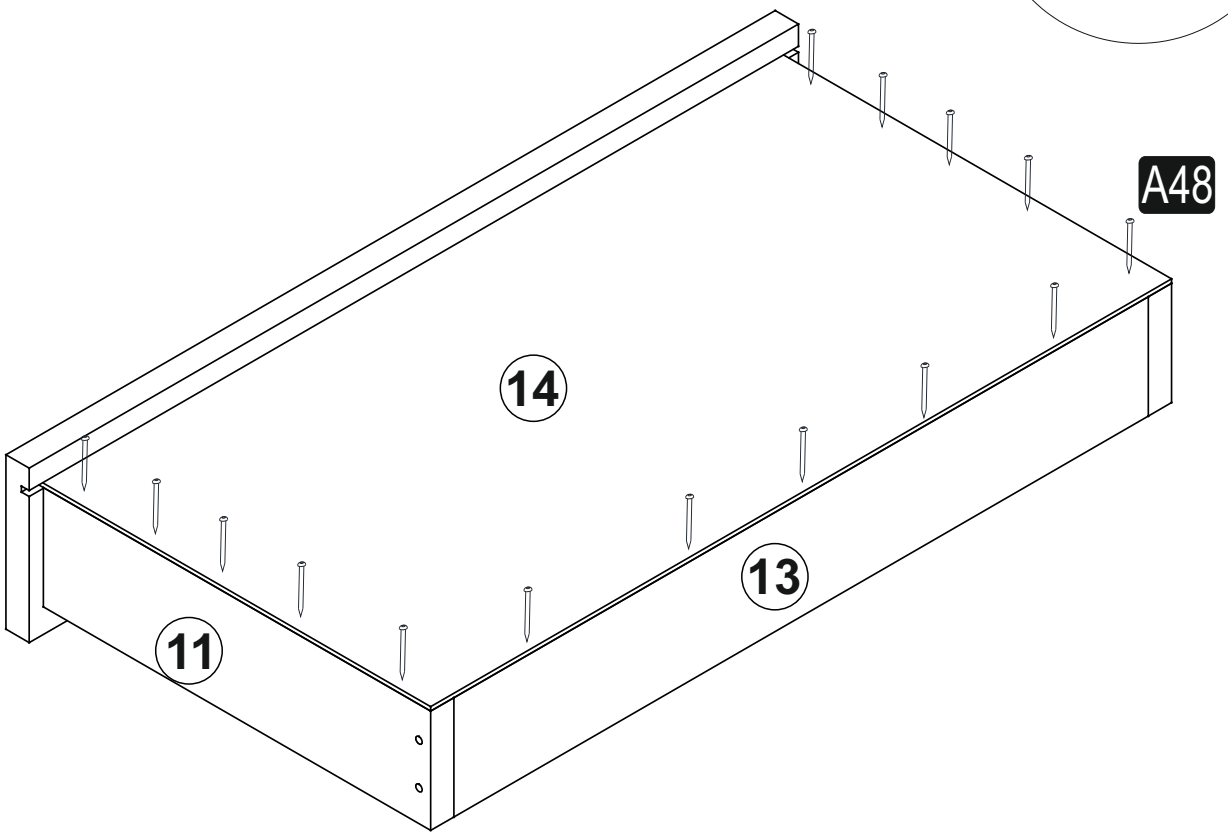

11

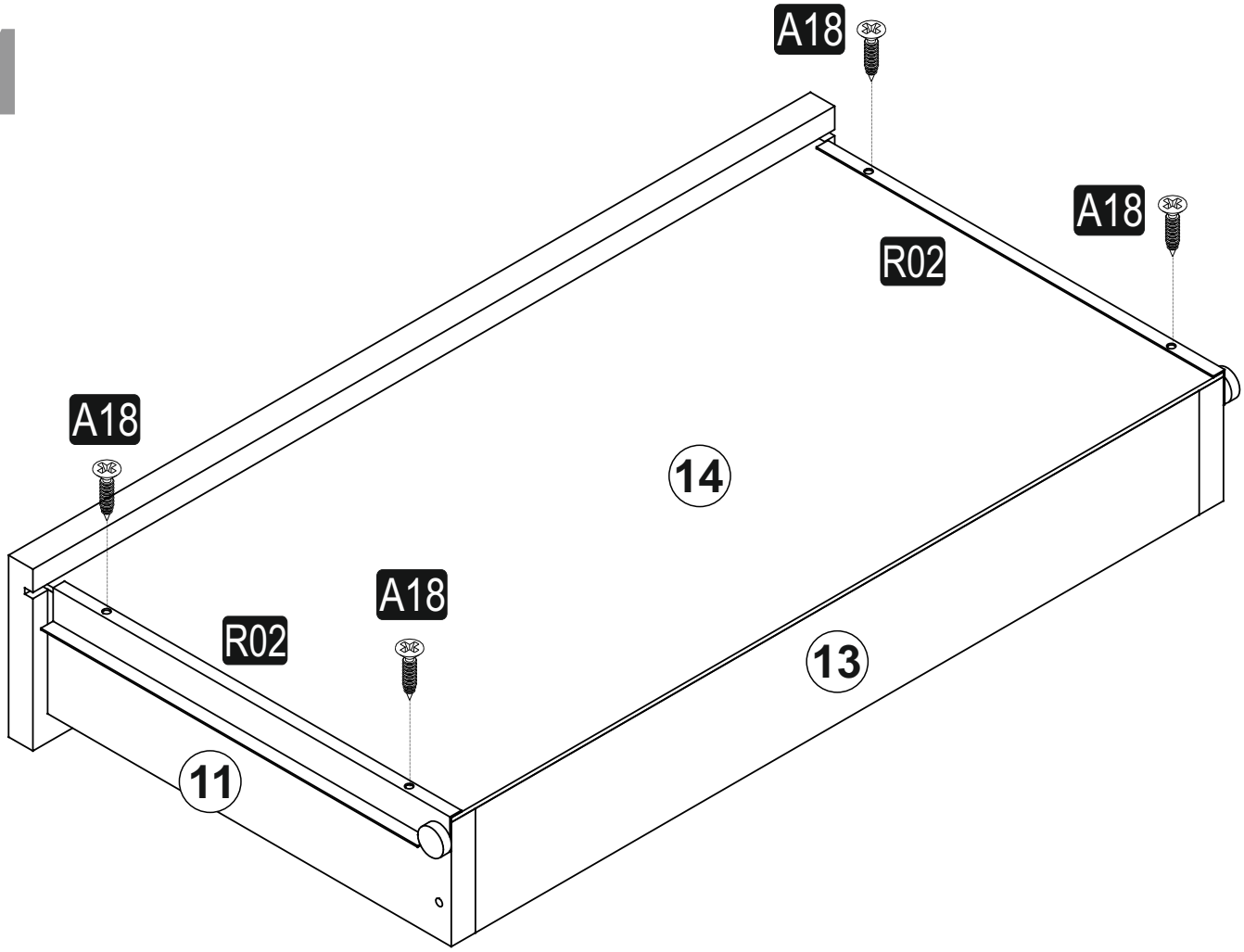

12

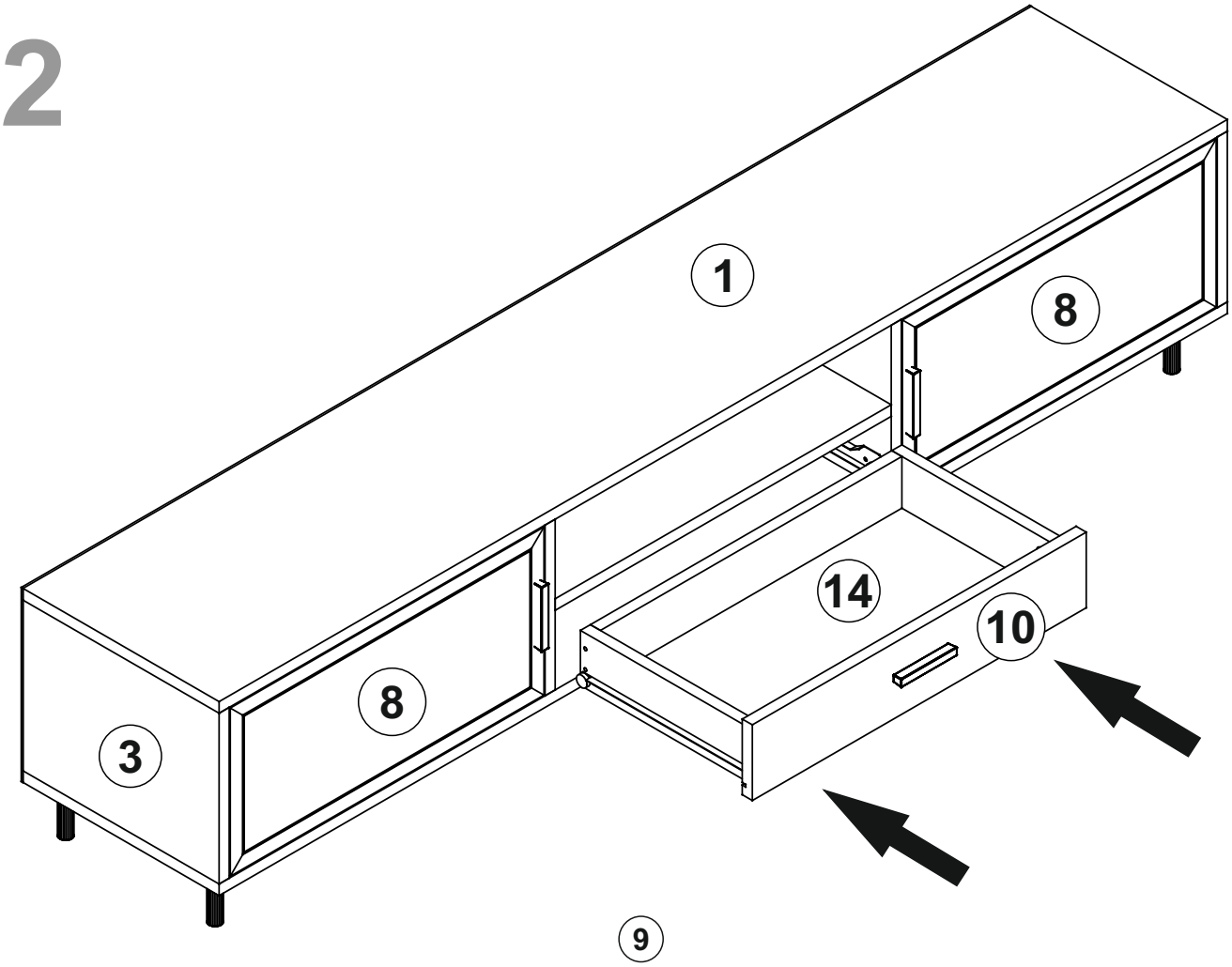
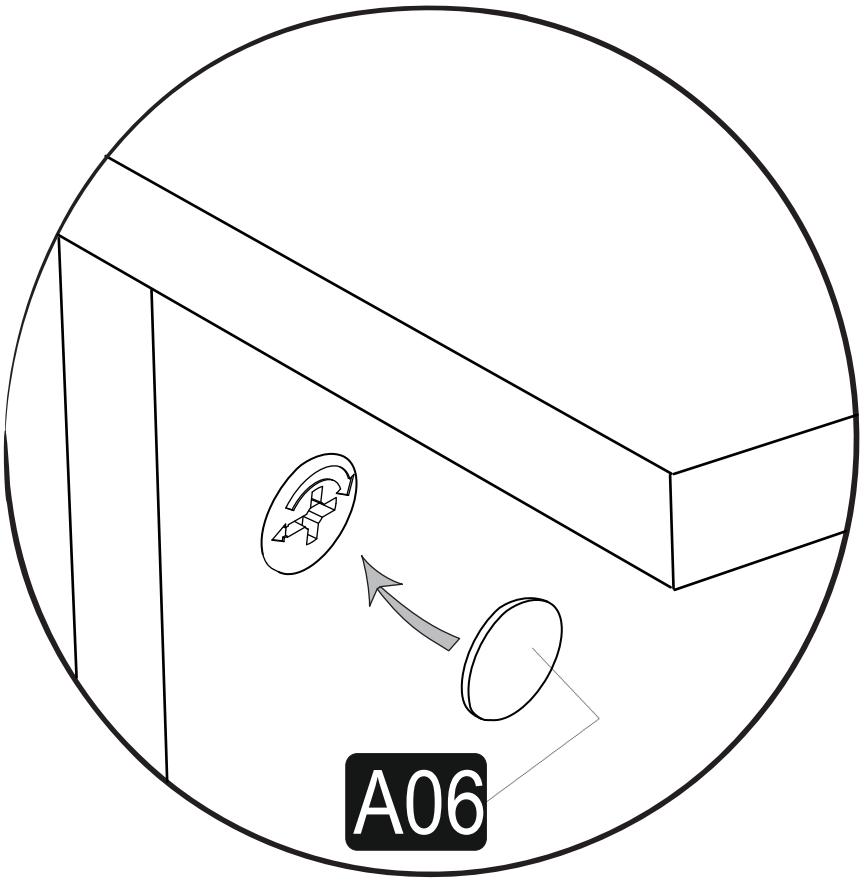
13